CATALOG OF REPLACEMENT PARTS

MODEL FP100 FOOD PROCESSOR

FP100	ML-38962
FP100C	ML-134179

A product of HOBART 701 S. RIDGE AVENUE TROY, OHIO 45374-0001

FORM 17778 Rev. B (February 2005)

Table of Contents

3 HOUSING UNIT
5 MOTOR AND BASE UNIT
7 ACCESSORIES
8 PUSH FEED HANDLE UNIT

 © HOBART

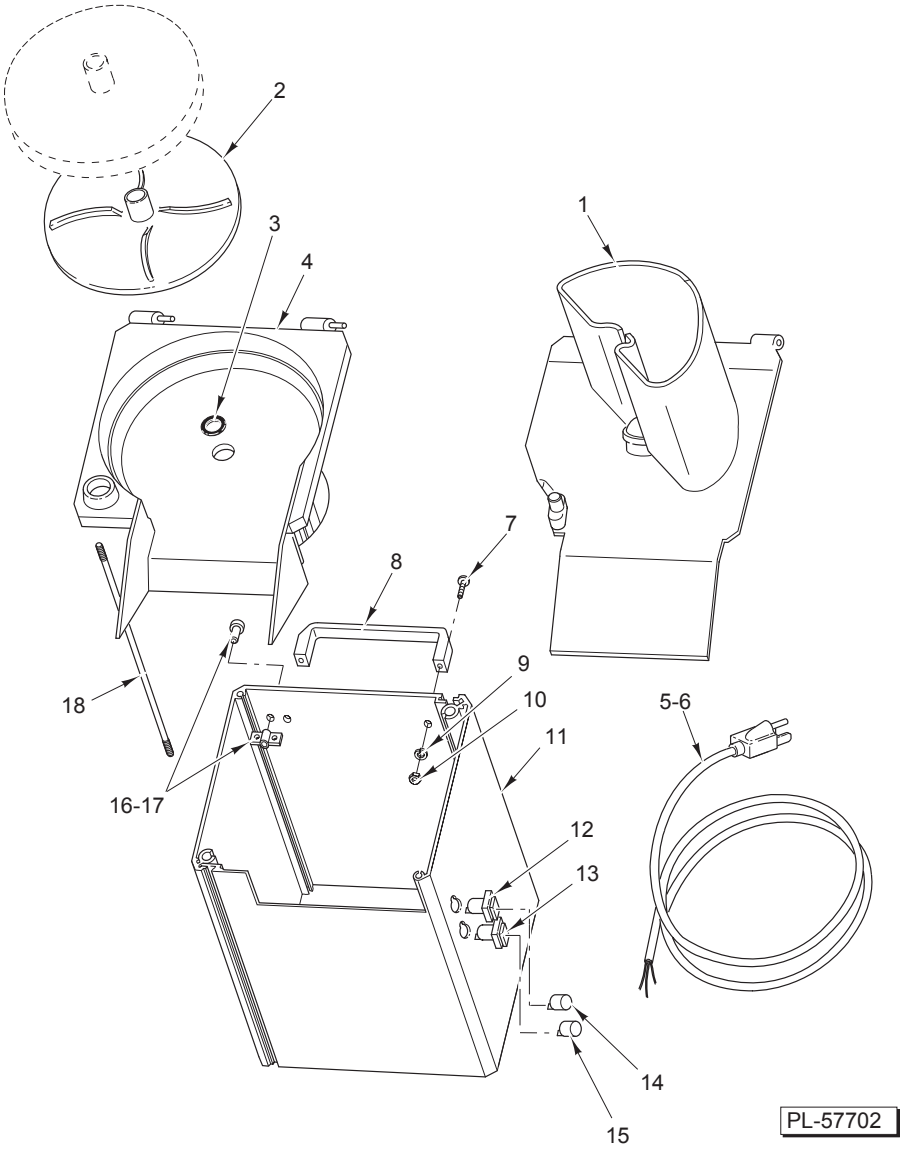

HOUSING UNIT

ILLUS. PL-57702	PART NO.	NAME OF PART	AMT.
1	00-274314	Feed Head Assy.	1
2	00-274316	Ejector	1
3	00-274321	Seal – Washer	1
4	00-274322	Knife – Chamber	1
5	00-274319	Cord & Plug (110/120 V.)	1
6	00-477265	Cord & Plug (220/230 V.)	1
7	SC-120-90	Mach. Screw M8 x 20mm Cheese Hd.	2
8	00-274328	Handle Assy. (Incls Items 7, 9, & 10)	1
9	WL-019-74	Lockwasher 8.2mm Helical	2
10	NS-047-36	Nut M8	2
11	00-274330	Housing Assy.	1
12	00-477266	Stop Button Assy. (220/230 V.)	1
13	00-477267	Start Button Assy. (220/230 V.)	1
14	00-875522	Stop Button Assy. (110/120 V.)	1
15	00-875523	Start Button Assy. (110/120 V.)	1
16	FE-024-37	Strain Relief (Power Cord) (110/120 V.)	1
17	FE-025-33	Strain Relief (Power Cord) (220/230 V.)	1
18	00-274327	Pin Screw Assy. (Incls. Lockwashers & Nuts)	4

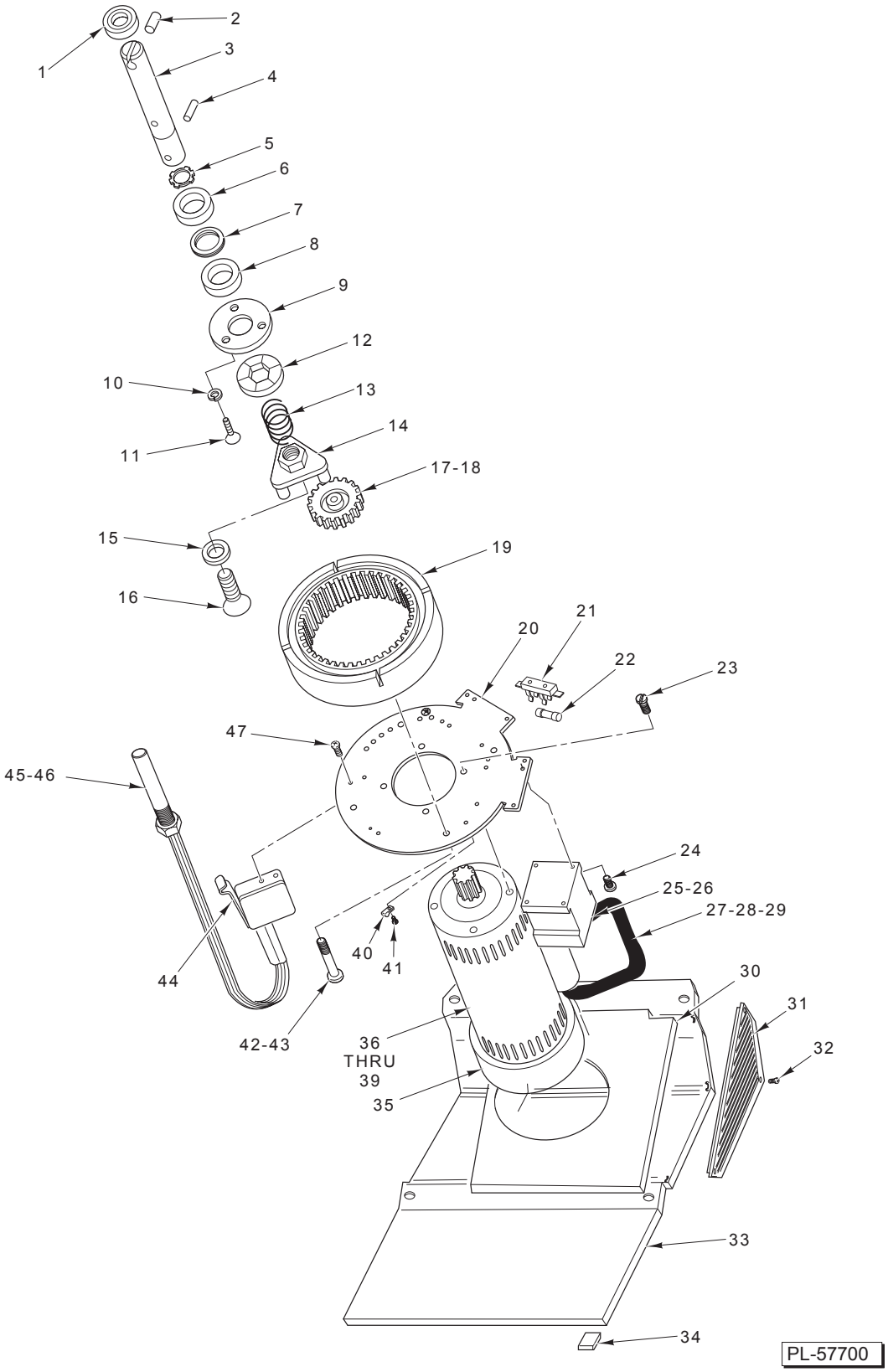

MOTOR AND BASE UNIT

MOTOR AND BASE UNIT

ILLUS. PL-57700	PART NO.	NAME OF PART	AMT.
1	00-274333	Seal – Rubber Washer 18 x 30mm	1
2	00-274323	Pin	1
3	00-274395	Shaft – Knife	1
4	RP-006-24	Roll Pin 6 x 28mm	1
5	00-274400	Clip – Bearing	1
6	BB-017-09	Ball Bearing MRC 203S-01-ST-E-92-C	1
7	00-274399	Spacer – Bearing	1
8	BB-017-09	Ball Bearing MRC 203S-01-ST-E-92-C	1
9	00-274403	Shim – Brake	1
10	WL-019-75	Lockwasher 5.1mm Helical	3
11	SC-120-92	Mach. Screw M5 x 0.8 x 12mm Slotted Cheese Hd. (SST)	3
12	00-274336	Disc – Brake	1
13	00-274394	Spring – Pressure	1
14	00-274393	Planet Carrier	1
15	00-274376	Washer – Spring	1
16	SC-120-93	Mach. Screw M5 x 0.8 x 10mm Hex Flat Hd. (SST)	1
17	00-274402	Wheel – Planetary	3
18	00-274398	Washer – Planetary	3
19	00-274397	Ring – Planetary	1
20	00-478132	Motor Plate Assy.	1
21	00-477269	Holder – Fuse	1
22	00-477268	Fuse T100 (220/230 V.)	1
23	SC-120-94	Mach. Screw M5 x 0.8 x 10mm Slotted Cheese Hd. (SST)	4
24	SD-037-41	Self-Tapping Screw 3.5 x 13mm Phil. Oval Hd., Type AB	4
*25	00-087713-089-1	Contactor (110/120 V.)	1
26	00-087713-089-2	Contactor (220/230 V.)	1
27	00-274390	Wiring Harness	1
28	00-274344	Circuit RC (110 V.)	1
29	00-274860	Circuit RC (220 V.)	1
30	00-274350	Plate – Fan	1
31	00-274351	Louver RH & LH (Incls. Item 32)	2
32	SD-037-40	Self-Tapping Screw 3.5 x 9.5mm Slotted Oval Hd., Type AB	6
33	00-274352	Base Assy. (Incls. Item 34) (Give Serial Number)	1
34	00-274353	Foot – Rubber	4
35	00-274387	Cover – Fan	1
36	00-274386	Capacitor – Motor (110/120 V., 60 Hz.) (Not Shown)	1
37	00-436480	Capacitor – Motor (220/230 V., 50 Hz.) (Not Shown)	1
38	00-274347	Motor & Gear (110/120 V., 60 Hz.)	1
39	00-435596	Motor & Gear (220/230 V., 50 Hz.)	1
40	00-274405	Clamp – Cable	1
41	SD-037-42	Self-Tapping Screw 3.5 x 9.5mm Phil. Oval Hd., Type AB	1
42	SC-120-91	Mach. Screw M5 x 0.8 x 40mm Slotted Cheese Hd. (SST)	4
43	WL-019-75	Lockwasher 5.1mm Helical	4
44	00-274346	Micro-Switch Assy.	1
45	00-439663	Switch – Reed (110/120 V.)	1
46	00-477264	Switch – Reed (220/230 V.)	1
47	SD-037-42	Self-Tapping Screw 3.5 x 9.5mm Phil. Oval Hd., Type AB	2

* For Service on Machines Built Prior to SN 76-1009723, Order 00-478132.

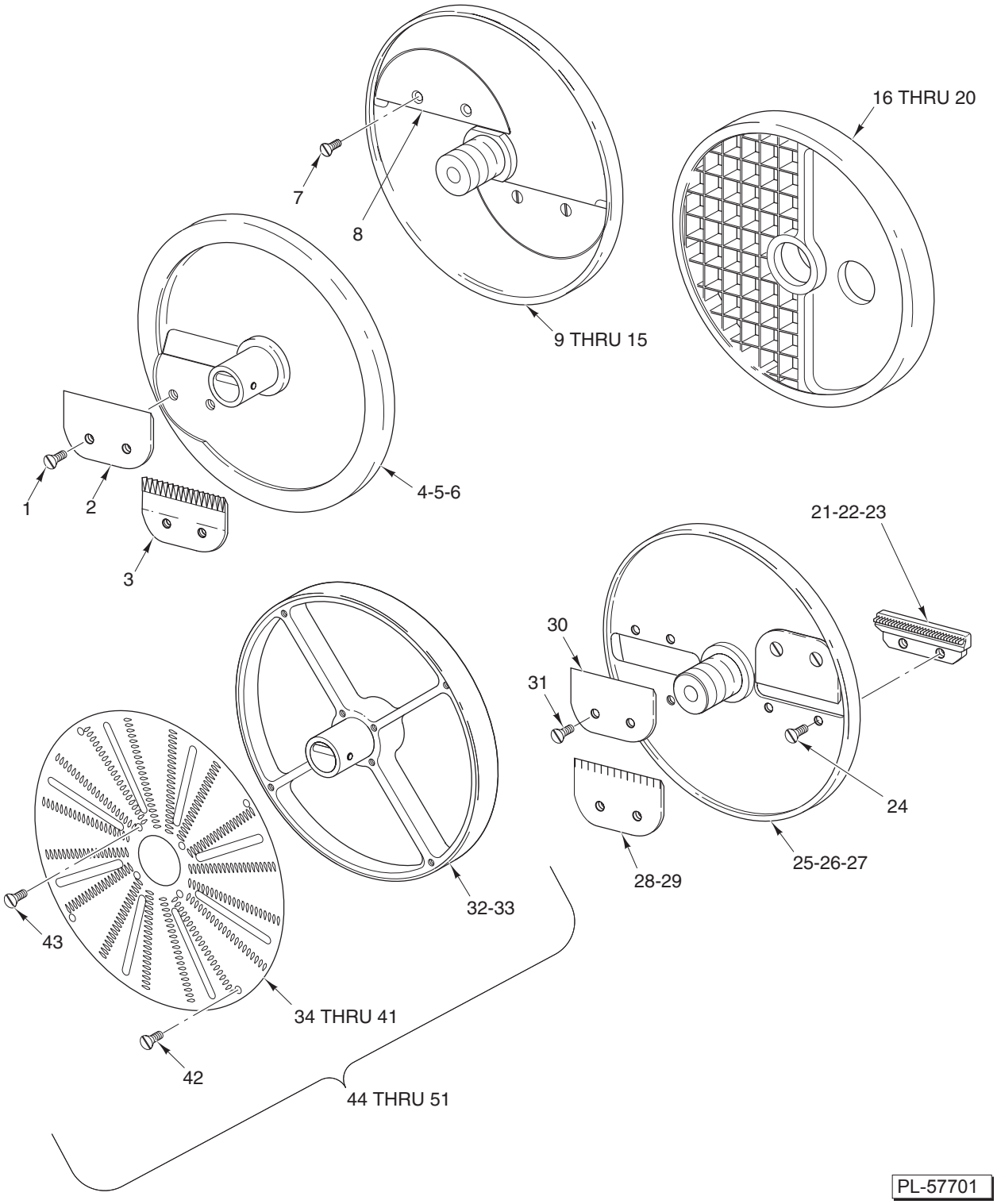

ACCESSORIES

ACCESSORIES

ILLUS. PL-57701	PART NO.	NAME OF PART	AMT.
1	SC-120-82	Mach. Screw M5 x 0.8 x 0.6mm Slotted Flat Hd. (SST)	AR
2	00-274317	Knife – Standard Cut Slicer	AR
3	00-436726	Knife – Crimping Slicer	1
4	00-274354	Plate – Standard Cut Slicer 3/8 In. (1 Knife) (Incls. Items 1 & 2)	1
5	00-436725	Plate – Crimping Slicer 3/16 In. (4.5mm) (Incls. Items 1 & 3)	1
6	00-914163	Plate – Slicer 1/2 In. (2 Knife) (Incls. Items 1 & 2)	1
7	SC-120-82	Mach. Screw M5 x 0.8 x 0.6mm Slotted Flat Hd. (SST)	AR
8	00-274318	Knife – Fine Cut Slicer	AR
9	00-274355	Plate – Fine Cut Slicer 1/16 In. (2 Knife) (Incls. Items 7 & 8)	1
10	00-274356	Plate – Fine Cut Slicer 5/32 In. (1 Knife) (Incls. Items 7 & 8)	1
11	00-274357	Plate – Fine Cut Slicer 7/32 In. (1 Knife) (Incls. Items 7 & 8)	1
12	00-274358	Plate – Fine Cut Slicer 3/8 In. (1 Knife) (Incls. Items 7 & 8)	1
13	00-914203	Plate – Fine Cut Slicer 5/8 In. (I Knife) (Incls. Items 7 & 8)	1
14	00-914223	Plate – Slicer 3mm (1 Knife) (Incls. Items 7 & 8)	1
15	00-914224	Plate – Slicer 9mm (1 Knife) (Incls. Items 7 & 8)	1
16	00-477317	Plate – Dicer 9/32 In.	1
17	00-477316	Plate – Dicer 3/8 In.	1
18	00-477315	Plate – Dicer 5/8 In.	1
19	00-477314	Plate – Dicer 3/4 In.	1
20	00-914165	Plate – Dicer 1/2 In. (Not Shown)	1
21	00-437549	Knife – Balk 3/32 In. (Use With Item 30)	2
22	00-437550	Knife – Balk 3/16 In. (Use With Item 28)	1
23	00-437552	Knife – Balk 5/16 In. (Use With Item 29)	1
24	SC-120-83	Mach. Screw M4 x 0.7 x 0.6mm Slotted Flat Hd. (SST)	AR
25	00-437553	Plate – Julienne 3/32 In. (2 Knife) (Incls. Items 21, 24, 30, & 31)	1
26	00-437554	Plate – Julienne 3/16 In. (1 Knife) (Incls. Items 22, 24, 28, & 31)	1
27	00-437555	Plate – Julienne 5/16 In. (1 Knife) (Incls. Items 23, 24, 29, & 31)	1
28	00-294968	Knife – Julienne 3/16 In. (Use with Item 22)	1
29	00-294968-00003	Knife – Julienne 5/16 In. (Use with Item 23)	1
30	00-274317	Knife – Standard Cut Slicer (Use with Item 21 for 3/32 Julienne)	2
31	SC-120-82	Mach. Screw M5 x 0.8 x 0.6mm Slotted Flat Hd. (SST)	AR
32	00-435731	Frame – Fine Grater (For 1/16 In., 3/32 In., & 1/8 In. Inserts)	1
33	00-435732	Frame – Fine Grater (For 3/16 In., 7/32 In., & 5/16 In. Inserts)	1
34	00-435734	Insert – Shredder Plate 1/16 In.	1
35	00-274409	Insert – Shredder Plate 1/8 In.	1
36	00-274320	Insert – Shredder Plate 3/32 In.	1
37	00-274343	Insert – Shredder Plate 3/16 In.	1
38	00-435735	Insert – Shredder Plate 7/32 In.	1
39	00-274410	Insert – Shredder Plate 5/16 In.	1
40	00-914232	Insert – Extra Fine Grater Plate	1
41	00-274411	Insert – Fine Grater Plate	1
42	SD-037-39	Self-Tapping Screw 2.9mm x 13mm Slotted Flat Hd., Type AB (SST)	AR
43	SD-038-39	Self-Tapping Screw 3.5mm x 13mm Slotted Oval Hd., Type AB (SST)	AR
44	00-914226	Plate – Extra Fine Grater (Incls. Items 40, 42, & 43)	1
45	00-435730	Plate – Fine Grater (Incls. Items 32, 41, 42, & 43)	1
46	00-435724	Plate – Shredder 1/16 In. (Incls. Items 32, 34, 42, & 43)	1
47	00-435725	Plate – Shredder 3/32 In. (Incls. Items 32, 36, 42, & 43)	1
48	00-435726	Plate – Shredder 1/8 In. (Incls. Items 32, 35, 42, & 43)	1
49	00-435727	Plate – Shredder 3/16 In. (Incls. Items 33, 37, 42, & 43)	1
50	00-435729	Plate – Shredder 5/16 In. (Incls. Items 33, 39, 42, & 43)	1
51	00-435728	Plate – Shredder 7/32 In. (Incls. Items 33, 38, 42, & 43)	1
	00-274372	Rack – Wall (Incls. Label)	1
	00-274329	Brush – Cleaning	1

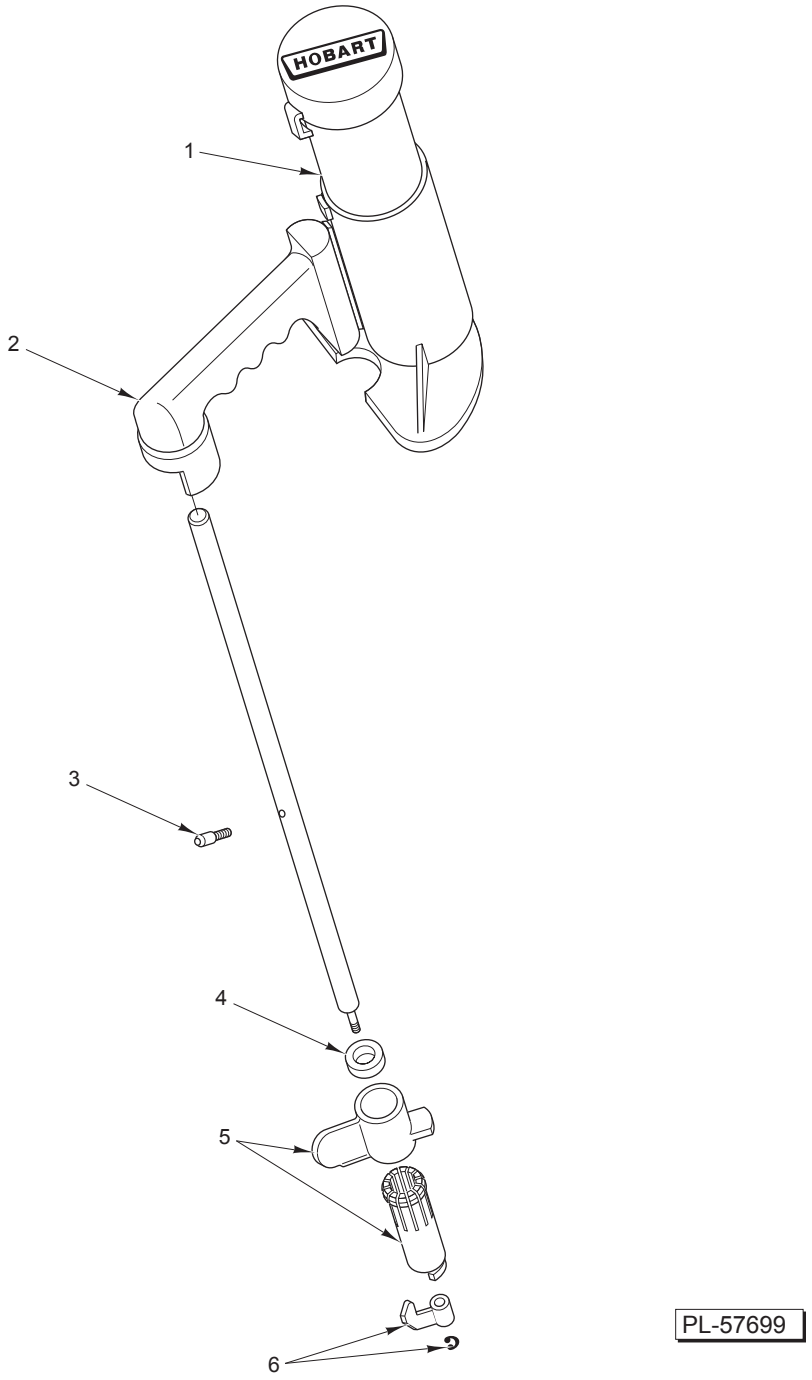

PUSH FEED HANDLE UNIT

ILLUS. PL-57699	PART NO.	NAME OF PART	AMT.
1	00-274312	Plunger – Pestle	1
2	00-437251	Handle – Push (Feed) (Order With Item 3)	1
3	00-274323	Pin	2
4	00-274324	Seal – Rubber Washer	1
5	00-274325	Lock – Push Handle	1
6	00-274326	Activator	1