INSTALLATION & OPERATION MANUAL

Gas Fryers

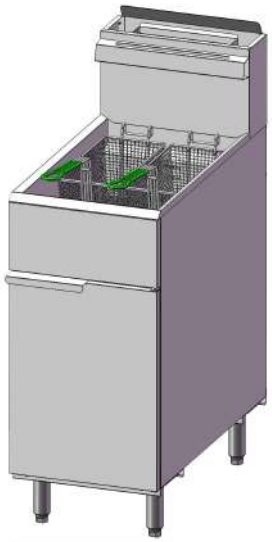

Models

DCF3-LPG

DCF3-NG

DCF4-LPG

DCF4-NG

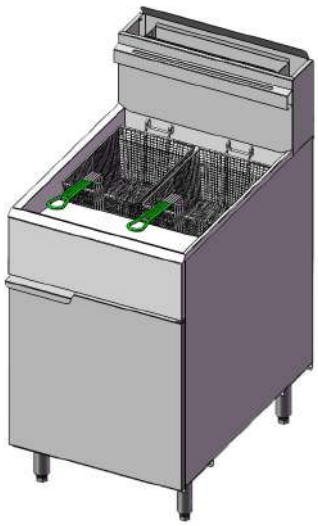

Models

DCF5-LPG

DCF5-NG

Model	Gas type	Tubes	Gas pressure
DCF3-LPG	Propane	3	10”WC
DCF3-NG	Nature gas	3	4”WC
DCF4-LPG	Propane	4	10”WC
DCF4-NG	Nature gas	4	4”WC
DCF5-LPG	Propane	5	10”WC
DCF5-NG	Nature gas	5	4”WC

⚠WARNING: Improper installation, adjustment, alteration, service or maintenance can cause property damage, injury or death. Read the installation, operating and maintenance instructions thoroughly before installing or servicing this equipment.

FOR YOUR SAFETY

Do not store or use gasoline or other flammable vapors and liquids in the vicinity of this or any other appliance.

⚠WARNING

In the event a gas odor is detected, shut down equipment at the combination gas valve and contact the local gas company or gas supplier for service

⚠WARNING

FOR YOUR SAFETY

Keep area around appliances free and clear of combustibles. Purchaser of equipment must post in a prominent location, detailed instructions to be followed in the event the operator smells gas. Obtain the instructions from the local gas supplier.

-SAFETY PRECAUTIONS-

Before installing and operating this equipment, be sure everyone involved in it operation is fully trained and aware of precautions. Accidents and problem can be caused by failure to follow fundamental rules and precautions.

The following symbol, found throughout this manual, alert you to potentially dangerous conditions to the operator, service personnel, or to the equipment.

⚠ DANGER

This symbol warns of immediate hazards that will result in severe injury or death

⚠ WARNING

This symbol refers to a potential hazard or unsafe practice that could result in injury or death

⚠ WARNING

Hot oil and parts can cause burns. Use care when operating, cleaning and servicing the fryer

⚠ CAUTION

This symbol refers to a potential hazard or unsafe practice that could result in injury, product damage, or property damage

⚠ NOTICE

This symbol refers to information that needs special attention or must be fully understood, even though not dangerous

⚠ WARNING

FOR YOUR SAFETY

LP-gas cylinders are not to be stored in any compartments on the appliance that are not intended for cylinder storage and that such unauthorized storage could lead to an explosion, fire, or personal injury.

⚠ WARNING

BURN HAZARD

Contact with hot oil will cause severe burns. Always use caution. Oil at 200℉ is more dangerous than boiling water.

⚠ NOTICE

Gas floor model fryers are intended for commercial use only. Not for household use Warranty will be void if service work is performed by other than a qualified technician, or if other than genuine replacement parts are installed.
Be sure this Operator 'S Manual and important papers are given to the proper authority to retain for future reference
Congratulations! You have purchased one of the finest pieces of commercial cooking equipment on the market

You will find that your new equipment has been designed and manufactured to meet the toughest standards in the industry. Each equipment is carefully engineered and designs are verified through laboratory tests and field installations. With proper care and field maintenance, you will experience years of reliable, trouble-free operation.

For best results, read this manual carefully

RETAIN THIS MANUAL FOR FUTURE REFERENCE

MODELS

This manual is for Gas floor model Fryers with 40 lbs., 50 lbs. and 70 lbs. capacity fry pots. The capacity is described on the serial plate that is located inside the front door on the left side.

Table of Contents

Installation----------5
Operation----------14
Cooking hints----------16
Cleaning----------16
Service (for authorized service technician only) ----------18
Parts----------23

Read these instructions carefully before attempting installation. Installation and initial startup should be performed by a qualified installer. Unless the installation instructions for this product are followed by a qualified service technician (a person experienced in and knowledgeable with the installation of commercial gas and/or electric cooking equipment) then the terms and conditions on the Manufacturers Limited Warranty will be rendered void and no warranty of any kind shall apply**.**

Gas Supply and Burner Information

Supply pressure should be minimum of 4" W.C. for natural gas or 10" W.C for propane. The fryer comes with 3/4" NPT male connector on a 1/2 pipe allowing you to connect with either 3/4" or 1/2" NPT female connector.

The minimum environmental temperature for safe use of the appliance ： **-20℉**

INSTALLATION

NOTICE

Installation must conform with local codes, or in the absence of local codes with the National Fuel Gas Code, ANSI Z223.1, Natural Gas Installation Code, CAN/CGA-B149.1, or the Propane Installation Code, CAN/CGA-B149.2, as applicable.

NOTICE

These installation procedures must be followed by qualified personnel or warranty will be void.
Local codes regarding installation vary greatly from one area to another. The National Fire Protection Association, Inc. states in its NFPA 96 latest edition that local codes are the authority having jurisdiction when it comes to installation requirements for equipment

Unpacking & Installation

UNPACK

IMMEDIATELY INSPECT FOR SHIPPING DAMAGE

All containers should be examined for damage before and during unloading. The freight carrier has assumed responsibility for safe transit and delivery. If damaged equipment is received, either apparent or concealed, a claim must be made with the delivering carrier.

Apparent damage or loss must be noted on the freight bill at the time of delivery. The freight bill must then be signed by the carrier representative (Driver). If the bill is not signed, the carrier may refuse the claim. The carrier can supply the necessary forms.

A request for inspection must be made to the carrier within 15 days if there is concealed damage or loss that is not apparent until after the equipment is uncrated. The carrier should arrange an inspection be certain to hold all contents plus all packing material.

1. Uncrate carefully. Report any hidden damage to the freight carrier IMMEDIATELY
2. Do not remove any tags or labels until unit is installed and working properly.

INSTALL THE LEGS（OR OPTIONAL CASTERS） AND RESTRAINTS

A set of legs is packed with the fryer. Casters are optional, purchased separately（part number：18.001.0003）. Mounting fasteners are pre-mounted on the base plates.

1. Raise fryer sufficiently to allow legs to be screwed into the base plate. For safety, "shore up" and support the fryer with an adequate blocking arrangement strong enough to support the load.
2. Screw the four legs or casters to the plate on the bottom of the fryer. When casters have been ordered, the casters having a locking-brake should be attached under the front of the fryer
3. Lower the fryer gently. Never drop or allow the fryer to fall.
4. Use a level to make sure that the fryer is level. Each caster, or the tubular-end leg, can be screwed in or out to lower or raise each corner of the fryer.
5. Attach restraints as required by local codes.
6. The front and back wheels are marked as "FRONT CASTER" and "BACK CASTER" respectively, so install them in their respective locations as shown below：

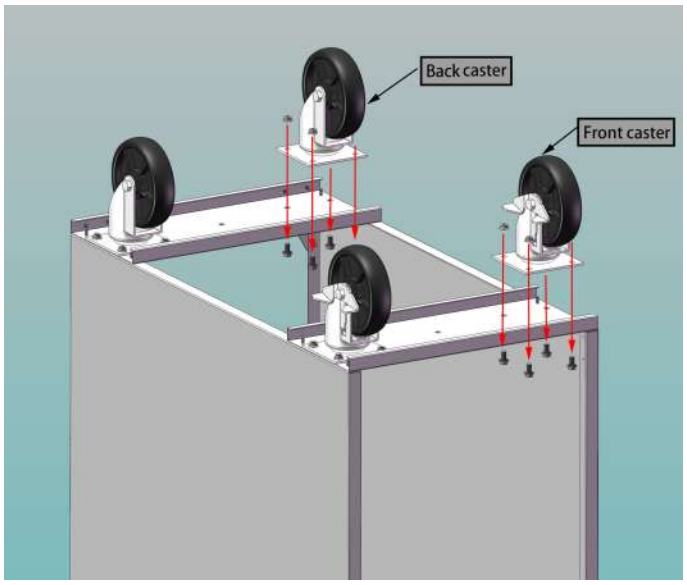

⚠WARNING

FOR YOUR SAFETY

If the appliance is designed for use with a hose that will lie on the ground, the hose must be protected from damage.

- Do not use hoses that have expired its lifespan.
- The hose needs to be far away from the fire source to avoid thermal deformation.
- Make sure to use a pipe clamp to fasten the connection of the hose interface.

NOTICE

Unit must be level to assure maximum performance. Improper leveling may void warranty.

NOTICE

When this appliance is installed with casters, it must be installed with the casters supplied, a connector complying with either ANSI Z21.69 CSA 6.16 or a quick-disconnect device complying with ANSI Z21.41 CSA 6.9. It must be also installed with restraining means to guard against transmission of strain to the connector; this restraint device is installed on the caster in the front of the product (as part of the caster). When the product is installed in place, please pull the restraint device of the caster to the "ON" position. If you want to move the equipment, make sure that the gas source is completely disconnected then pull the restraint device of the caster to the "OFF" position.

WARNING

If disconnection of the restraint is necessary to move the appliance for cleaning, etc., reconnect it when the appliance is moved to its original installed position.

WARNING

All fryers must be restrained to prevent tipping in order to avoid the splashing of hot liquid.

- **When using, keep the oil level of the oil pan not exceeding the "MAX" limit line.**
- **Prevent the hot oil from splashing caused by water dripping into the tank**

WARNING

When the fryer is filled with hot oil, do not move the fryer. Forcibly moving the fryer may cause serious injury to the human body. When you need to move the item, please cut off the gas source first, wait for the oil in the cylinder to cool down, then empty the cylinder, and finally move it.

FLUE INSTALLATION

1. Unpack the flue box and flue wrap

2. Slide the flue box over the flue and secure it with the two self-tapping screws using a 5/16” socket

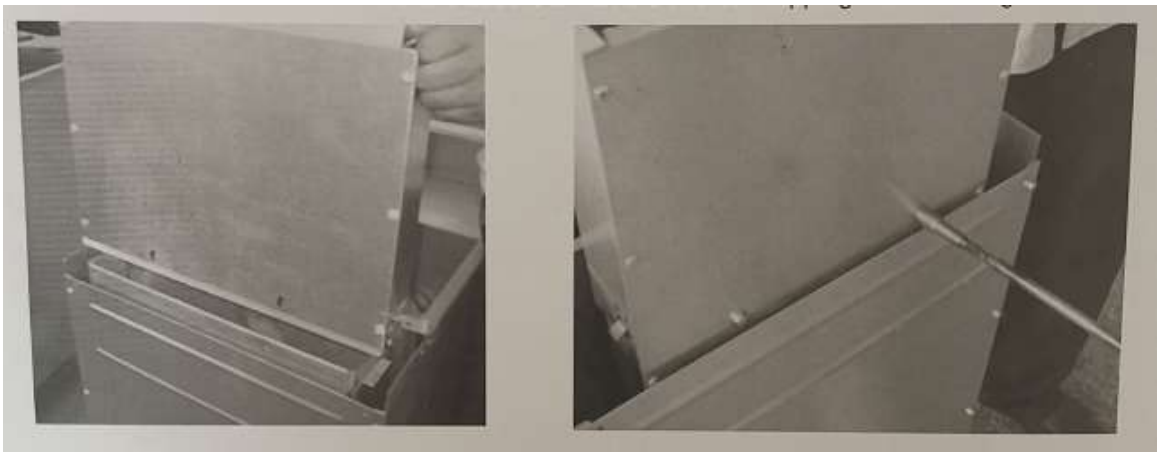

3. Slide the flue wrap over the flue

4. Secure it with four self-tapping screws two on the back and one on each side using a 5/16 socket

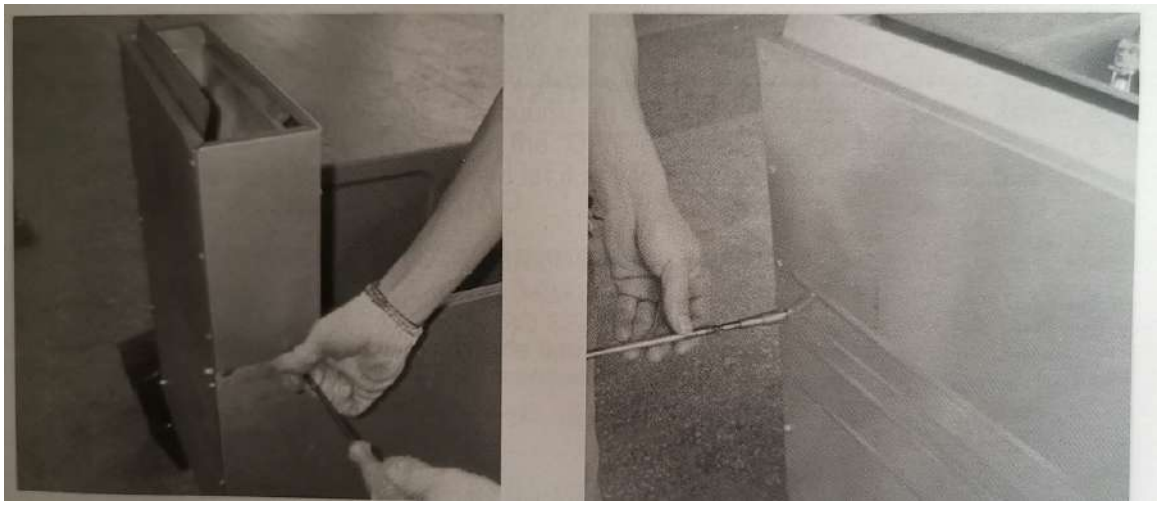

Check Clearances and Ventilation

Select a firm, level location for your fryer. Leave clearance, whenever possible, so that access from the rear is possible to permit cleaning. If the unit is to be set on non-combustible flooring, such as a concrete slab inches minimum toe room must be provided to prevent restriction of the air opening in the bottom of the unit.

⚠ WARNING

There must be adequate clearance between fryer(s) and construction. Clearance must also be provided in front for servicing and for operation
Minimum Clearances:

From Non-Combustible Material
Sides 0 inches
Rear 0 inches
From Combustible Construction
Sides 8 inches
Rear 12 inches
ALL GAS FLOOR MODEL FRYERS SHALL BE INSTALLED WITH AT LEAST A 16 INCH SPACE BETWEEN THE FRYER AND SURFACE FLAMES FROM ADJACENT EQUIPMENT. A FLAME GUARD /S ACCEPTABLE /F ALLOWED UNDER LOCAL CODE.

A clearance of not less than 16 in (400mm) shall be provided between this deep fat fryer and an open flame of an adjacent appliance unless a noncombustible divider extending not less than 7 in (175mm) above the fryer and the open flame of the adjacent appliance is provided.

No additional side and rear clearance is required for service as the fryer is serviceable from the front.

⚠ WARNING

Improper ventilation can result in personal injury or death. Ventilation that fails to properly remove flue products can cause headaches, drowsiness, nausea, or could result in death Unit must be installed under a ventilation hood

All units must not be installed in such a manner that the flow of combustion and ventilation air is obstructed. Provisions for adequate air supply must also be provided. Do NOT obstruct the bottom front of the unit, as combustion air enters through this area. Be sure to inspect and clean the ventilation system according to the ventilation equipment manufacturer's instructions.

Due to the variety of problems that can be caused by outside weather conditions, venting by canopies or wall fans is preferred over any type of direct venting. It is recommended that a canopy extend 6" past the appliance and the bottom edge be located 6' 6"from the floor. Filters should be installed at an angle of 45 or more from the horizontal. This position prevents dripping of grease and facilitates collecting the run-off grease in a drip pan, unusually installed with a filter. A strong exhaust fan tends to create a vacuum in the room and may interfere with burner performance or may extinguish pilot flames. Fresh air openings any appliance, check the appliance with the exhaust fan in the "OFF" position. Do these only long enough to check

equipment performance, then turn hood back on and let it run to remove any exhaust that may have accumulated during the test.

The exhaust fan should be installed at least 2 feet above the vent opening at the top of the fryer.

Make sure all ventilation meet local code requirement.

This unit is not intended to be connected directly to an outside flue.

GAS CONNECTION

A 3/4"male NPT line for the gas connection is located near the lower right rear corner of the fryer. The serial plate(located inside the front door of the fryer)indicates the type of gas the unit is equipped to burn(natural gas or propane). The fryer should be connected only to the type of gas for which it is equipped.

A circuit diagram is located inside the front door of the fryer.

This equipment is adjusted at the factory; however, pilot height should be checked at installation and adjusted, if necessary.

For orifice sizes and pressure regulator settings, see the chart on page 4. If the fryer is being installed at over 2,000 feet altitude and that information was not specified when ordered, contact the appropriate authorized Service Representative or the Service Department. Failure to install with all with proper orifice sizing will result in poor performance and may void the warranty.

If applicable, the vent line from the gas appliance pressure regulator shall be installed to the outdoors in accordance with local codes or, in the absence of local codes, with the National Fuel Gas Code, ANST Z223.1, Natural Gas Installation Code, CAN/CGA-B149.1, or the propane Installation Code, CAN/CGA B149.2, as applicable.

The appliance and its individual shutoff valve must be disconnected from the gas supply piping system during any pressure testing of that system at test pressures in excess of 1/2psi (3.5kPa).

The appliance must be isolated from the gas supply piping system by closing tis individual manual shutoff valve during any pressure testing of the gas supply piping system at test pressures equal to or less than 1/2psi (3.5kPa).

An adequate gas supply is imperative. Undersized or low pressure lines will restrict the volume of gas necessary for satisfactory performances. A combination gas valve and pressure regulator, which is provided with each unit, is set to maintain a 4" W.C.

manifold pressure for natural gas or 10.0"W C. manifold pressure for propane gas. However, to maintain these conditions the pressure on the supply line, when all units are operating simultaneously, should not drop below 7" W.C. for natural gas or 11"W.C. for propane gas.
Fluctuations of more than 25% on natural gas or 10% on propane gas will create problems and affect burner I operating characteristics. A 1/8"tap to measure the manifold pressure is located on the combination gas valve, which is on the burner manifold located directly below the burners inside the cabinet.

Purge the supply line to clean out dust, dirt, or other foreign matter before connecting the line to the unit.

It is recommended that an individual manual shutoff valve be installed in the gas supply line to the unit.

Use pipe joint compound that is suitable for use with both natural and Lp gas on all threaded connections.

CAUTION ALL PIPE JOINTS AND CONNECTIONS MUST BE TESTED THOROUGHLY FOR GAS LEAKS.
USE ONLY SOAPY WATER FOR TESTING ON ALL GASES. NEVER USE AN OPEN FLAME TO CHECK FOR GAS LEAKS. ALL CONNECTIONS MUST BE CHECKED FOR LEAKS AFTER THE UNIT HAS BEEN PUT INTO OPERATION. TEST PRESSURE SHOULD NOT EXCEED 14"W C

CAUTION THIS APPLIANCE AND ITS IND/VIDUAL COMBINAT/ON GAS VALVE MUST BE DISCONNECTED FROM THE GAS SUPPLY PIPING SYSTEM DURING ANY PRESSURE TESTING OF THAT SYSTEM AT TEST PRESSURES IN EXCESS OF 14WC(1/2 PSIG or 3. 45 kPa)

If the incoming gas pressure is in excess of 14 wc (1/2PSl, 3. 45 kPa), a proper step-down regulator will be required. See photo 1 for LP application

Connect the gas supply directly to the 3/4"male NPT connector located near the lower left rear corner of the fryer. When tightening the supply pipe, be sure to hold the mating connector extending from the unit securel with a wrench. This will prevent any damage or distortion to the internal piping and controls of the unit.

After connecting the gas supply, check again that the fryer is level. Use a long spirit level four ways, across the front and rear of the frypot, and along each edge.

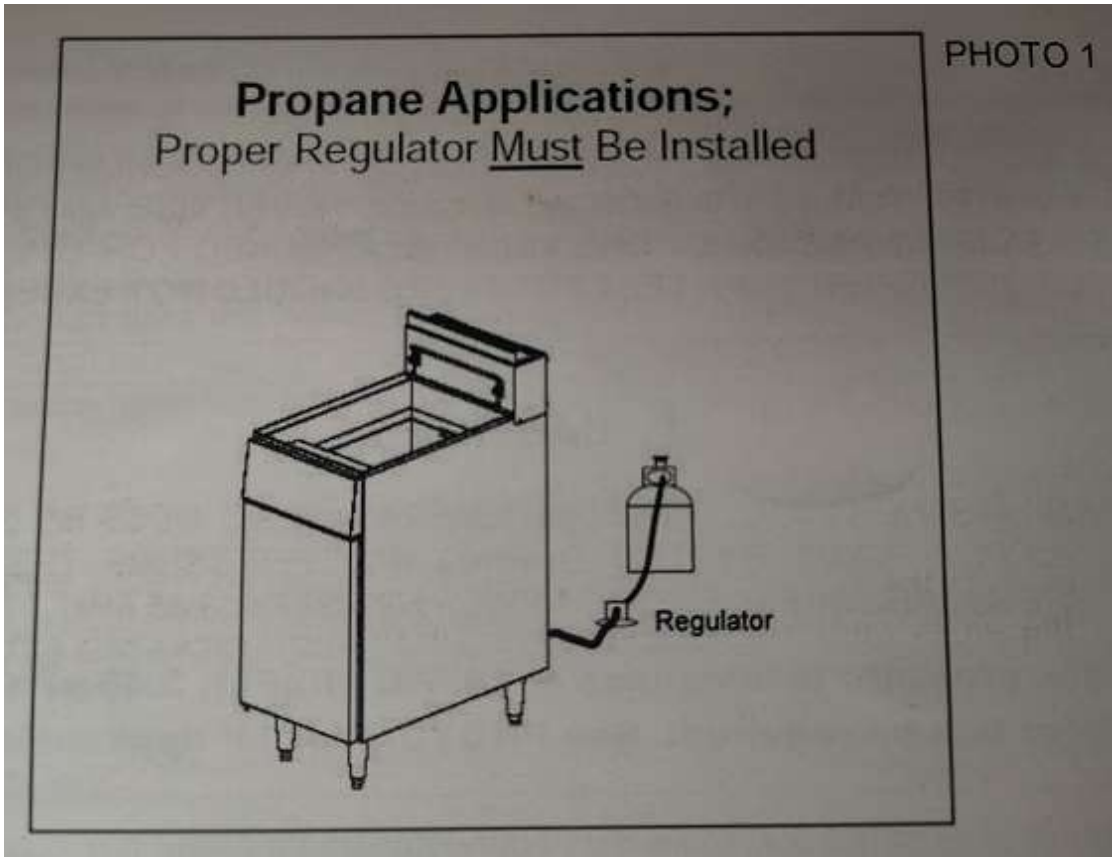

OPERATION

LIGHTING

⚠ CAUTION

IF YOU SMELL GAS DURING THE LIGHTING PROCEDURE IMMEDIATELY SHUT OFF THE GAS SUPPLY UNTIL THE LEAK HAS BEEN CORRECTED

Open the burner compartment door and do the following

1. Turn thermostat to“OFF”
2. Press down the knob of the combination gas valve, turn it counterclockwise to the"PILOT"

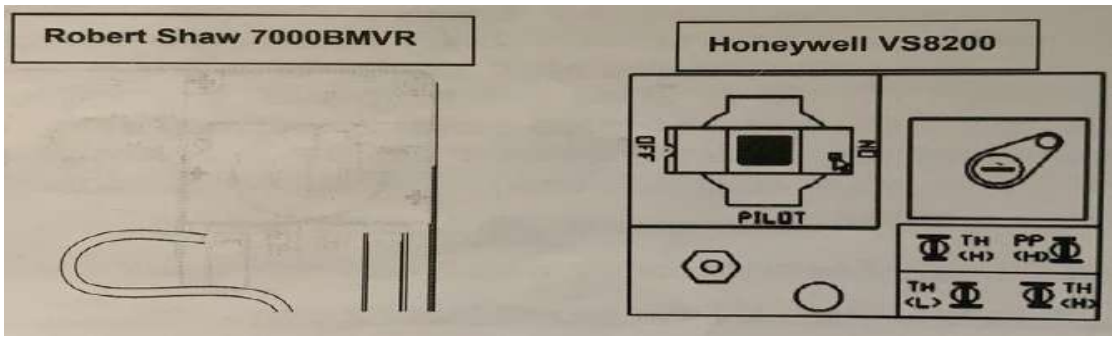

3. While pressing the knob down, use a lit match to ignite the pilot. Continue to press the knob down for about 30 seconds. If the pilot does not stay lit when the knob is released, repeat the lighting procedure and keep the knob down longer. Adjustment of pilot flame may be necessary
4. When the pilot stays lit, turn the knob counterclockwise to the"ON position. Do not press down on theknob in this step
5. Do NOT turn the thermostat"ON"until the frypot is filled with oil or solid shortening
6. Once the frypot is filled with shortening, set the thermostat to the desired temperature.

FILLING THE FRY POT

1.Close drain valve completely before filling the fry pot

2.When the fryer is new, fill the fry pot with water and clean thoroughly (see "Weekly Cleaning" on page 15)in order to remove protective coatings and any foreign matter

3. The recommended solid shortening capacity for the fry pot (35, 55 or 60lbs) is described on the serial plate(which is located inside the front door

4.Remove the basket support frame when filling the fry pot with solid shortening

5.When solid shortening is used. be careful not to bend, break, or twist the thin capillary wires of the sensing elements located in the fry pot

6. Pack solid shortening into the zone below the tubes, all spaces between the tubes,

and at least an inch above the top of the tubes before lighting the fryer. If any air spaces are left around the heat tube surfaces when the heat is turned on the tube surfaces will become red hot, burn the solid shortening, weaken the fry pot, and could result in a fire.

⚠CAUTION

NEVER ATTEMPT TO MELT A SOLID BLOCK OF SHORTENING ON TOP OF THE HEAT TUBES

NEVER START THE BURNERS WHEN THE FRYPOT /S EMPTY.

7. To prevent burning or scorching the solid shortening, keep the thermostat set at the lowest temperature until all the solid shortening between and above the tubes has been melted. Additional solid shortening can then be added until the desired frying depth has been reached replace the basket support frame over the fry pot heat tubes

⚠WARNING:

1. DO NOT overfill fry basket
2. Carefully turn lower baskets into oil
3. Only turn items frying once while cooking
4. When cooking French fries of onion rings, etc., shake the basket(carefully, to avoid splattering oil)to keep items in basket separated while cooking
5. Battered foods should be dropped carefully, one at time, into fry basket or oil
6. If using basket, dip it first into the hot oil to prevent batter from building up on the baskets surfaces
7. When cooking is complete, remove basket or food items from oil. Hang basket on rear hanger

⚠WARNING:

Hot oil and parts can burns. Use care when operating, cleaning and servicing the fryer

1. Filter oil at least once a day. Refer to the instructions provided with your filtering equipment
2. A cold fryer will not drain properly; Always filter oil between 254℉ and 350℉ （123℃ and 177℃）
3. The shortening in the cold zone area will remain hard if the heat is only on for a few minutes. if necessary, use a clean-out rod to carefully stir the hard shortening to an area above the cold zone where it will melt
4. Use the tank brush to help clear sides and tubes of debris

SHUTDOWN PROCEDURE

Standby: Turn knob on the combination gas valve to the "PILOT" position. At this setting, only the pilot burner will remain ignited Complete Shutdown: Turn knob on the combination gas valve clockwise, press down on the knob and continue to turn to the "OFF" position

RELIGHTING

⚠ **WARNING**

In the event of a main burner ignition failure, a five minute purge period must be observed prior to reestablishing the ignition source

1. Shut off all gas
2. Wait five minutes
3. Follow the "Lighting" procedure described on page 13

AUTOMATIC PILOT VALVE

The Automatic Pilot Valve provides an automatic safety shutoff for the fryer when the pilot flame is extinguished. When the pilot flame is burning, the valve is held open electromagnetically by the electrical current from a thermopile in the pilot flame. When the pilot flame goes out, generation of current ceases and the valve closes automatically

HIGH LIMIT CONTROL

Gas floor model fryers are equipped with a secondary heat control that prevents the oil temperature from rising above 450℉.(Because of the accuracy tolerance of the sensor, the oil temperature may reach as high as 475℉)

In the event the fryer shuts down due to this condition, the oil must be cooled to below 400 F before the pilot burner can be re-ignited. When the oil has cooled, use the "Lighting "procedure on page 13 to place the fryer back in operation. If the problem persists, contact your local Service Representative or the Service Department

COOKING HINTS

USER TIPS

- Smoking oil means that the temperature is too high, or that the oil has broken down Gum in fry pot denotes a need for thorough cleaning (see Weekly Cleaning on page 16)
- Use different oil for oily foods (mackerel, nutmeg, etc. than for foods with water-soluble flavors (potatoes onions, etc.).
- Taste cool oil for quality. Replace it regularly, poor oil cannot produce good food

CLEANING

The equipment is constructed with the best quality materials and is designed to provide durable service when properly maintained. To expect the best performance, your equipment must be maintained in good condition and cleaned daily. Naturally, the frequency and extent of cleaning depends on the amount and degree of usage

Following daily and more extensive periodic maintenance procedures will increase

the life of your equipment Climatic conditions (e.g. salt air) may result in the need for more thorough and more frequent cleaning in order to keep equipment performing at optimal level

⚠ WARNING: BURN HAZARD

If necessary to move the fryer for cleaning, etc, drain oil first to avoid death or serious injury

⚠ WARNING

If disconnection of the restraint is necessary to move the appliance for cleaning, etc, reconnect it when the appliance is moved to it originally installed position

DAILY CLEANING

- Turn thermostat knob to "OFF" position
- Place hot-oil in a safe container under the drain and drain the fry pot completely
- Remove the basket support frame (if applicable) and flush out any sediment remaining in the fry pot with a little hot oil.
- Wipe off the basket support frame and the inside of the fry pot with a clean cloth

⚠ CAUTION

SOME AREAS OF THE FRYPOT MAY BE HOT!

- Close drain valve and strain the oil back into the fry pot through several thicknesses of cheesecloth, or pour it back using a filter machine

- Replace the basket support frame (if applicable
- Add oil or shortening to MIN oil level mark on rear of fry pot
- To resume cooking, turn the combination gas valve knob to "ON position

WEEKLY CLEANING

1. Follow steps 1 through 4 of the Daily Cleaning procedure (see previous section)
2. Close drain valve and fill fry pot with a solution of warm water and boil-out compound
3. Relight the fryer and bring the solution to a gentle boil for at least five minutes
4. Turn off main burners and let the solution stand until the gum deposits are softened and the carbon spots and burned grease spots can be rubbed off
5. Scrub the fry pot walls and heat tubes, then drain out fry pot and rinse it with clean water
6. Refill the fry pot with clean water and boil again
7. Turn off gas and drain and rinse well until clean

8. Wipe dry with a clean cloth
9. Refill as specified in the "Filling the Fry pot section (see page 13) "

MONTHLY CLEANING

1. Perform the Weekly Cleaning procedure (see previous section)
2. Clean around burner and orifices if lint has accumulated
3. Visually check that burner carry-over ports are unobstructed

CLEANING STAINLESS STEEL SURFACES

To remove normal dirt, grease and product residue from stainless steel use ordinary soap and water (with or without detergent) applied with a sponge or cloth.
Dry thoroughly with a clean cloth. Never use vinegar or any corrosive cleaner
To remove grease and food splatter or condensed vapors that have baked on the equipment apply cleanser to a damp cloth or sponge and rub cleanser on the metal in the direction of the polishing lines on the metal. Rubbing cleanser, as gently as possible, in the direction of the polished lines will not mar the finish of the stainless steel. NEVER RUB WITH A CIRCULAR MOTION. Soil and burnt deposits that do not respond to respond to the above procedure can usually be removed by rubbing the surface with SCOTCH-BRITETM scouring pads or STAINLESS scouring pads.
DO NOT USE ORDINARY STEEL WOOL, as any particles left on the surface
Will rust and further spoil the appearance of the finish. NEVER USE A WIRE BRUSH, STEEL SCOURING PADS(EXCEPT STAINLESS), SCRAPER, FILE OR OTHER STEEL TOOLS.
Surfaces that are marred collect dirt more rapidly and become more difficult to clean
Marring also increases the possibility of corrosive attack. Refinishing may then be required
Darkened areas, called "heat tint, sometimes appear on stainless steel surfaces where the area has been subjected to excessive heat. These darkened areas are caused by y thickening of the protective surface of the stainless steel and are not harmful. Heat tint can normally be removed by the above cleaning techniques, but tint which does not respond to that procedure calls for a vigorous scouring in the direction of the polish lines, using SCOTCH-BRITETM scouring pads or a STAINLESS scouring pad in combination with a powered cleanser. Heat tint action may be lessened by not applying or by reducing, heat to equipment during slack periods

SERVICE (FOR AUTHORIZED SERVICE TECHNICIAN ONLY)

NOTICE
Warranty will be void and the manufacturer is relieved of all liability if:
(A)Service work is performed by other than a qualified technician(see page 30 for detail)
OR
(B)Other than approved replacement parts are installed

⚠ WARNING

Adjustments and service work may be performed only by a qualified technician who is experienced in and knowledgeable with, the operation of commercial gas cooking equipment.
However, to assure your confidence, contact your Service Representative for reliable service, dependable advice or other assistance, and for genuine factory parts

All units are adjusted at the factory. In case of problems in operation at initial installation, check type of gas and manifold pressure and compare with information listed on the serial plate A mill voltage circuit diagram is located inside the front door of the fryer, and also on page 19

CHECKING AND ADJUSTING MAIN BURNERS

The main burners should burn with a steady flame, and the inner cone of the flame from each port should be about 3/4"long. The flame from each main burner should enter each heat tube without touching the front of the fry pot or the sides, top, or bottom of each tube

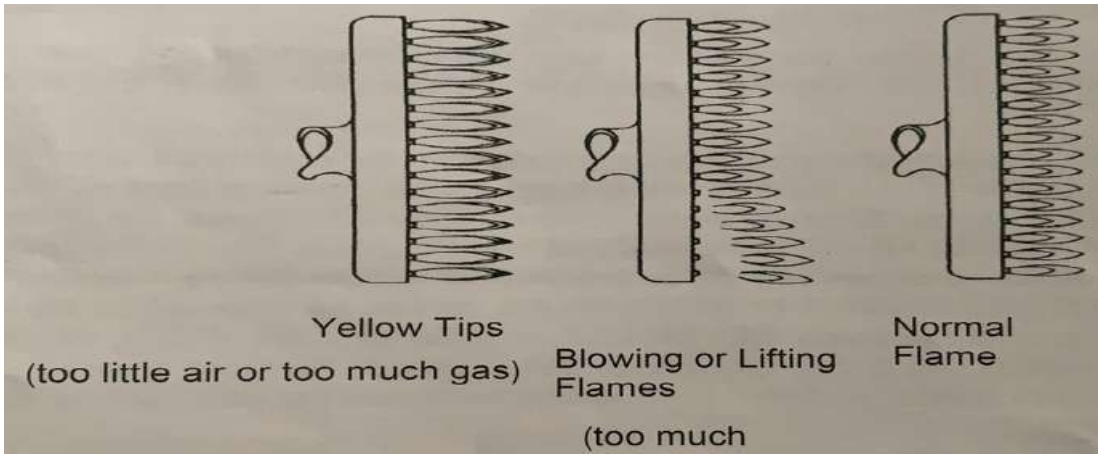

CHECKING AND ADJUSTING PRESSURE REGULATOR

The combination gas valve (includes pressure regulator) is factory set at 4"W.C. for natural gas and 10"WC for propane gas. To check the manifold pressure, do the following

1. Turn thermostat "OFF and combination gas valve knob to the "PILOT" setting
2.Remove pressure tap plug from burner manifold located directly below the burners in the cabinet
3. Install a fitting appropriate to connect a manometer
4. Turn combination gas valve to "ON position and thermostat to “ON: "The burners will ignite. Be certain that sufficient oil is covering the tubes
5. With burners on, read manometer
6.if the manometer does not read 4"W C for natural gas, or 10"W. C for propane gas, adjust regulator
7. Remove regulator adjustment screw cap (see diagram on page 15)
8.With small screwdriver rotate adjustment screw "CLOCKWISE" to increase or "COUNTERCLOCKWISE to decrease pressure. Be sure to adjust with burners "ON
9. Turn thermostat "OFF" and set combination gas valve knob to "PILOT" position
10. Remove manometer and replace pressure tap plug
11. Replace adjustment screw cap

CHECKING AND ADJUSTING CALIBRATION OF THERMOSTAT

All thermostat controls are carefully calibrated at the factory (i.e, the dial is properly set to control appliance temperatures accurately). Only a qualified appliance service technician should perform this adjustment

1. To check appliance temperatures, use a thermocouple-type temperature test instrument or reliable thermometer. Place the thermocouple of test instrument or thermometer in the center of the fry pot
2. Turn the control dial to the temperature setting requiring the greatest accuracy. Allow enough time for temperature to stabilize, or until several temperature readings are identical
3. Recalibrate if setting and actual temperature differ by more than 10F
4. Remove dial from dial shaft "B. Be careful that dial shaft does not rotate in either direction (which would change the dial setting)
5. Hold dial shaft "B" steady and with a screwdriver SHAFT urn calibration screw "A" clockwise to decrease the B temperature, or counterclockwise to increase the temperature
6. Replace dial. Let the appliance operate until the temperature has stabilized before a final check is made to determine whether or not the calibration has been corrected
7. Once correct. seal the calibration screw with glycol.

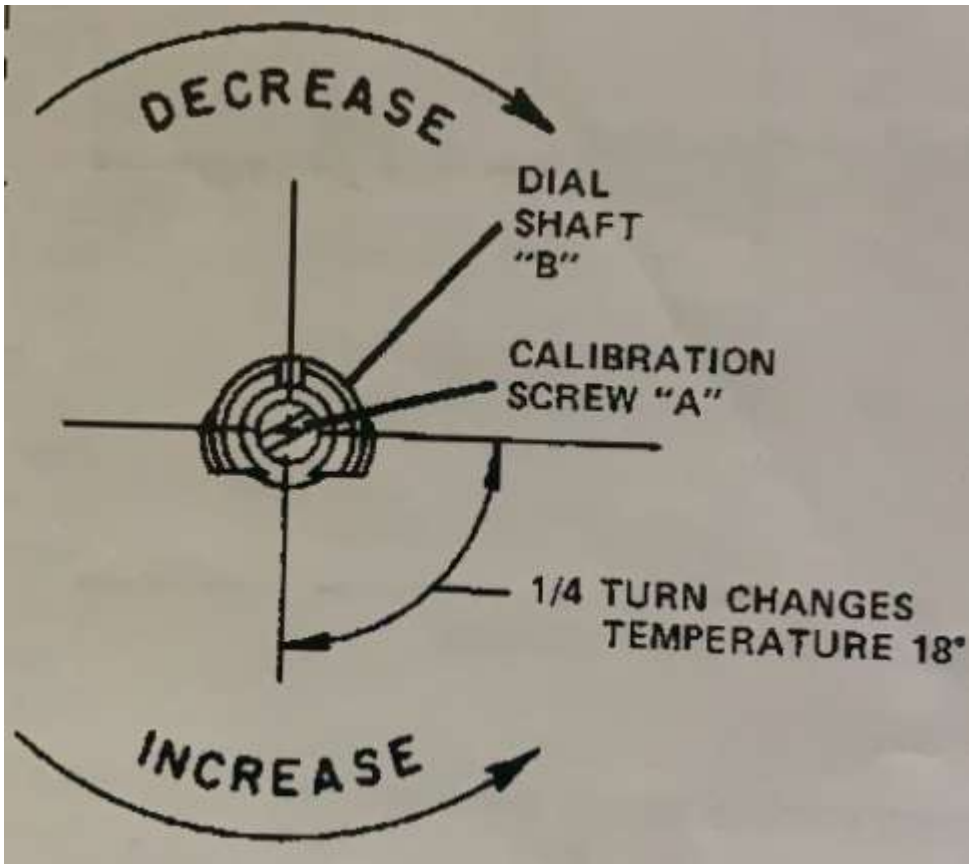

CHECKING AND ADJUSTING AUTO SAFETY PILOT

The plot flame should surround the thermopile for 1/2". It must be large and sharp enough to cause the thermopile to glow a dull red, or sufficient to hold the safety valve open

1. Remove pilot adjustment cap

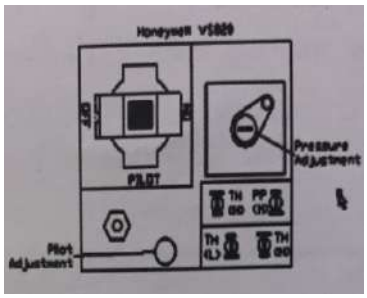

2. Adjust pilot key to provide properly sized flame shown in diagram B Diagram A shows an improperly adjusted pilot

3. Replace pilot adjustment cap

TROUBLESHOOTING

Problem	Likely Cause
Burners do not come on	Gas supply to unit off
	Combination gas valve is in "OFF" or "PILOT" position
Pilot not ignited	Thermostat not "ON"
	Combination gas valve is in "OFF" position
	Pilot gas not adjusted proper
	Gas supply to unit off
	Bad thermopile
	Dirty thermopile connections at combination gas valve or high limit
	Clogged orifice
	Air in gas line
	Improper ventilation system.
Pilot produces carbon deposits	Unit connected to wrong gas supply
	Pressure not adjusted correctly
	Pilot gas not adjusted correctly
Burners produce carbon deposits	Wrong size orifices
	Connected to wrong gas supply
	Pressure not adjusted correctly
	Flue obstructed

NOTE: Vibrations or shock caused by shaking or pounding baskets on top surface or by slamming door may cause Hi-Limit Control Switch to open. If this condition persists, additional cushioning may be added to the rubber grommets supporting this control to absorb these shocks

Wiring Diagram

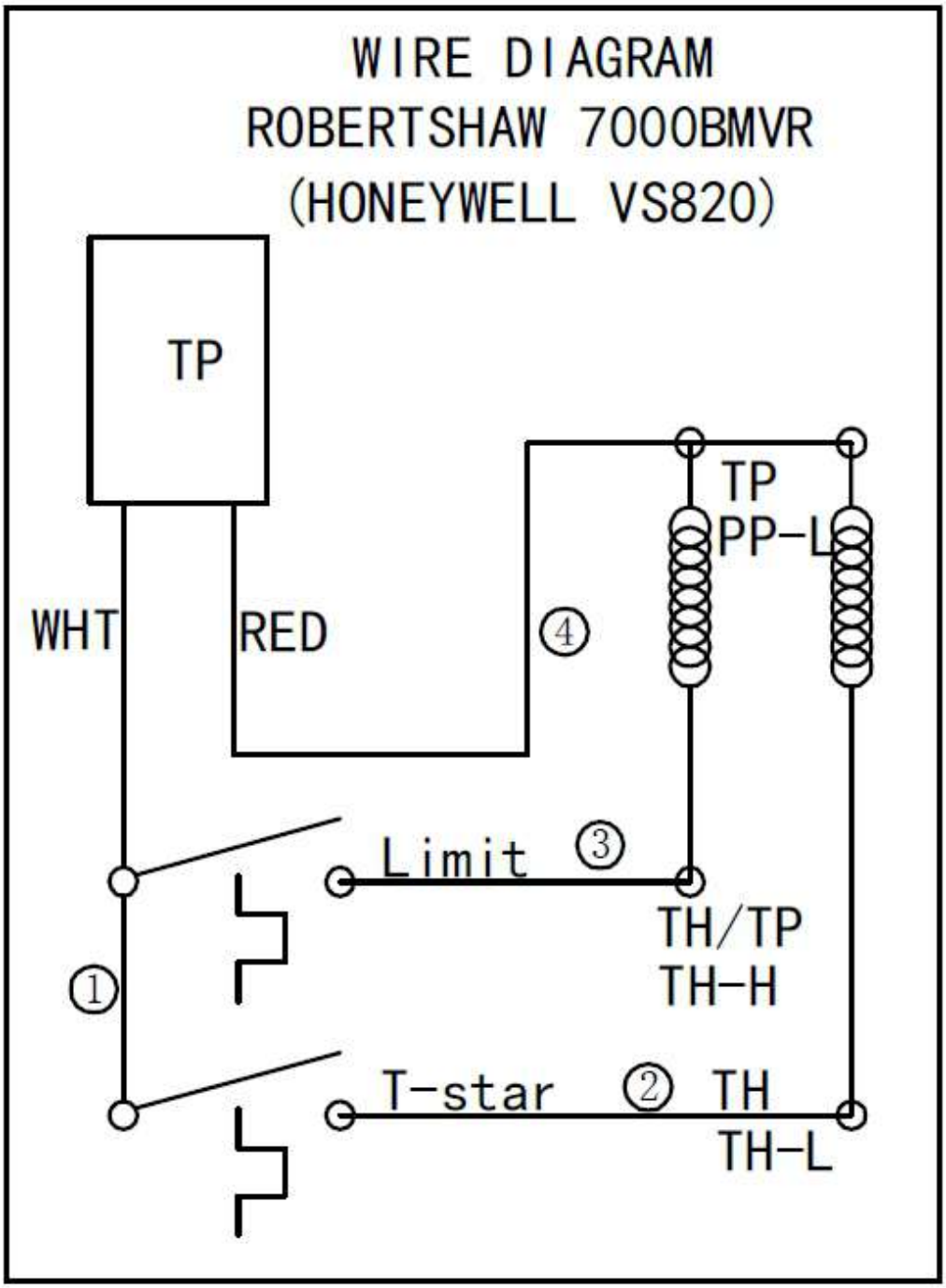

PARTS

NOTICE
INSTALLATION OF OTHER THAN GENUINE PARTS WILL VOID THE WARRANTY ON THIS EQUIPMENT

The serial plate is located inside the front door on the left side
Replacement parts may be ordered either through a Authorized Parts Distributor or a Authorized Service Agency

Index of Part Diagrams

Page Number	Description
24	Gas Parts for 3 tube fryer
25	Gas Parts for 4 tube fryer
26	Gas Parts for 5 tube fryer

Gas Parts for Fryer(3 tube shown)

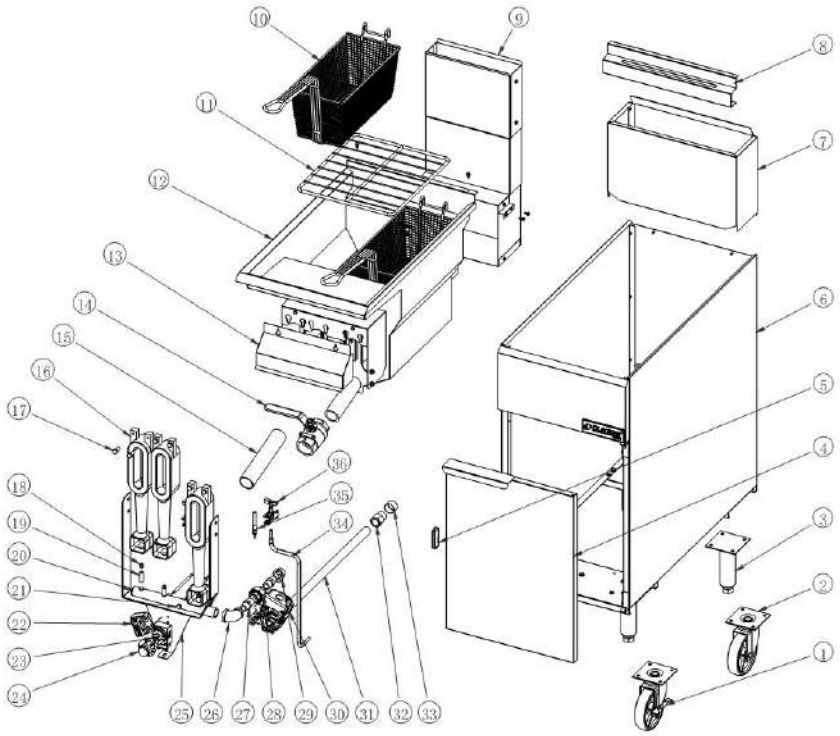

DCF3 fryer blast chart

NO.	Description	19	Nozzle Screw
1	5" Casters for unit with break	20	Manifold Assembly
2	5" Casters for unit with no break	21	Plugs
3	Stainless cone leg,H=6"～7"	22	Safety Hi Limit
4	Door components	23	Thermostat
5	Magnets for the doors	24	Thermostat Knobs
6	Outer cabinet	25	Braket for thermostat
7	Flue Deflector	26	Reducing elbow from
8	Fried basket hanging board	27	Inner joint
9	Flue components	28	Union
10	Fry Basket	29	Inside and outside elbow
11	Basket Screen	30	Milivolt Gas Valve
12	Tank	31	Gas Supply Pipe
13	Burner Deflector	32	Adapters
14	Drain Valve	33	Pipe cap
15	Drain Line Pipe	34	Pilot Gas Line
16	Cast Iron Burners	35	Thermalpile
17	Hex Bolts	36	Pilot Assembly
18	Orifice		

Gas Parts for Fryer(4 tube shown)

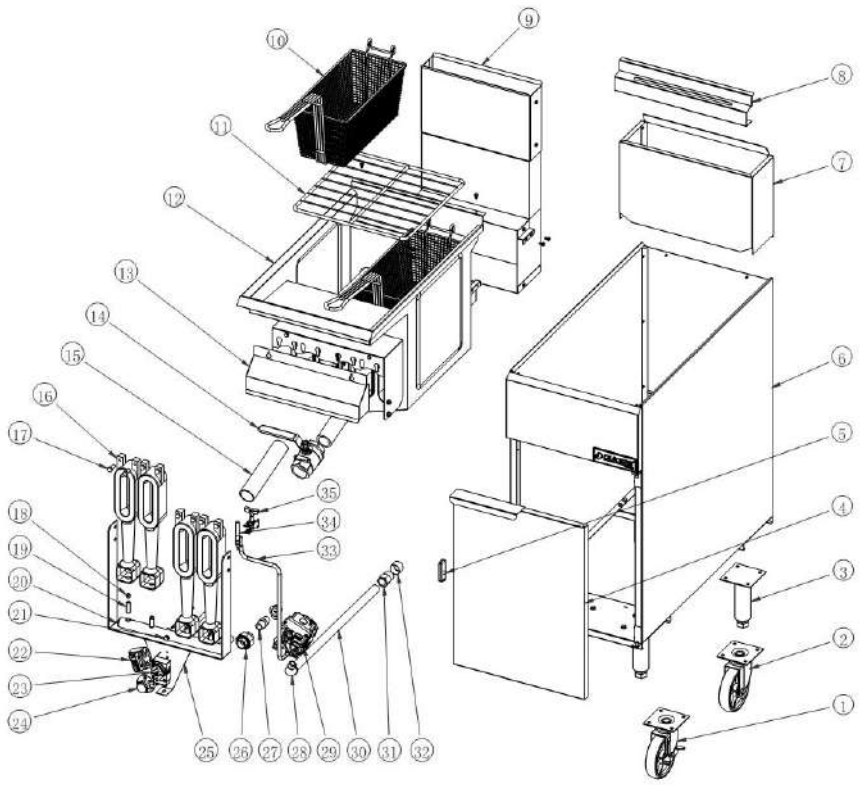

DCF4 fryer blast chart

NO.	Description	18	Orifice
1	5" Casters for unit with break	19	Nozzle Screw
2	5" Casters for unit with no break	20	Manifold Assembly
3	Stainless cone leg,H=6"～7"	21	Plugs
4	Door components	22	Safety Hi Limit
5	Magnets for the doors	23	Thermostat
6	Outer cabinet	24	Thermostat Knobs
7	Flue Deflector	25	Braket for thermostat
8	Fried basket hanging board	26	Inner joint
9	Flue components	27	Union
10	Fry Basket 165×340×157	28	Inside and outside elbow
11	Basket Screen 344×342	29	Milivolt Gas Valve
12	Tank	30	Gas Supply Pipe
13	Burner Deflector	31	Adapters
14	Drain Valve	32	Pipe cap
15	Drain Line Pipe	33	Pilot Gas Line
16	Cast Iron Burners	34	Thermalpile
17	Hex Bolts	35	Pilot Assembly

Gas Parts for Fryer(5 tube shown)

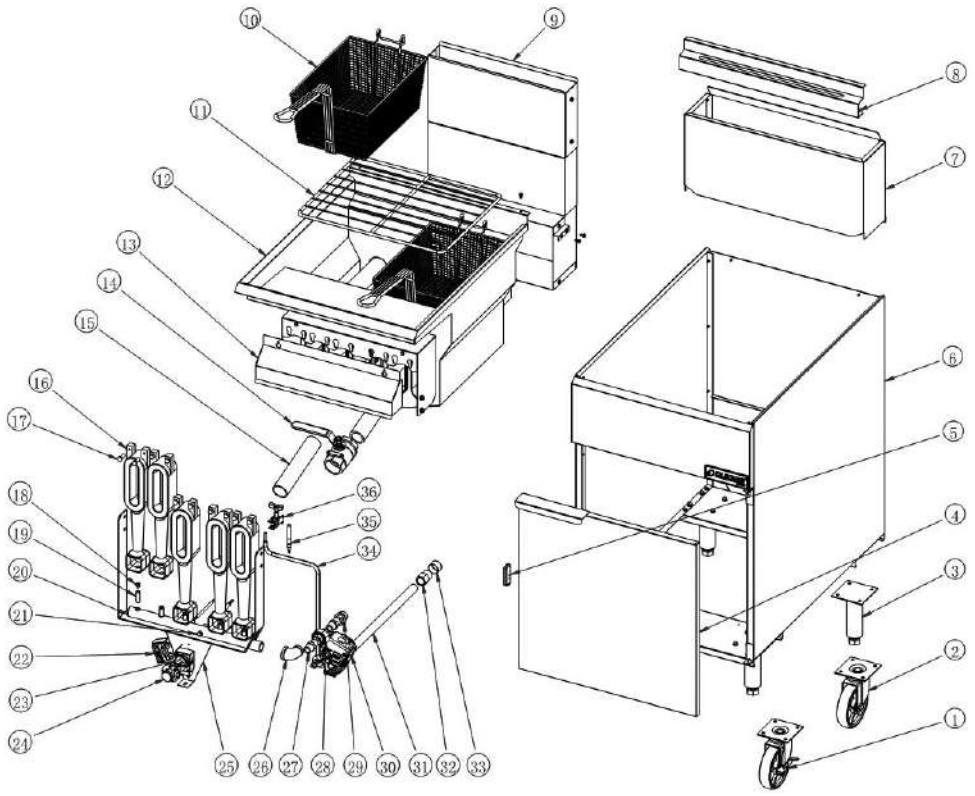

DCF5 fryer blast chart

NO.	Description	19	Nozzle Screw
1	5" Casters for unit with break	20	Manifold Assembly
2	5" Casters for unit with no break	21	Plugs
3	Stainless cone leg,H=6"～7"	22	Safety Hi Limit
4	Door components	23	Thermostat
5	Magnets for the doors	24	Thermostat Knobs
6	Outer cabinet	25	Braket for thermostat
7	Flue Deflector	26	Reducing elbow from
8	Fried basket hanging board	27	Inner joint
9	Flue components	28	Union
10	Fry Basket	29	Inside and outside elbow
11	Basket Screen	30	Milivolt Gas Valve
12	Tank	31	Gas Supply Pipe
13	Burner Deflector	32	Adapters
14	Drain Valve	33	Pipe cap
15	Drain Line Pipe	34	Pilot Gas Line
16	Cast Iron Burners	35	Thermalpile
17	Hex Bolts	36	Pilot Assembly
18	Orifice		

DUKERS FRYER

A product with the DUKERS name incorporates the best in durability and low maintenance. We all recognize, however, that replacement parts and occasional professional service may be necessary to extend the useful life of this unit. When service is needed, contact a DUKERS Authorized Service Agency, or your dealer. To avoid confusion, always refer to the model number, serial number, and type of your unit

LIMITED ORIGINAL COMMERCIAL EQUIPMENT WARRANTY FOR THE GAS FRYERS

DUKERS warrants the Gas Fryer to be free of defects in materials and workmanship for a period of 1 year from the date of original installation

This Warranty is subject to the the following conditions and limitations:

1. This warranty is limited to product(s) sold by DUKERS to the original user in the continental United States and Canada.
2. Original installation must occur within 18 months of date of manufacture, and proof of the installation must Canada be provided to DUKERS.
3. The liability of DUKERS is limited to the repair or replacement of any part found to be defective.
4. DUKERS will bear normal labor charges incurred in the repair or replacement of a warranted piece of equipment within 50 miles (80 kilometers) of an authorized service agency. Time and travel charges in excess of 50 miles (80 kilometers)will be the responsibility of the person or firm requesting the service
5. This warranty does not apply to any product(s) which have not been installed in accordance with the directions published in the appropriate installation and operation manuals. DUKERS will bear no responsibility or liability for any product(s)which have been mishandled, abused, misapplied, misused, subject to harsh chemical action, (chlorinated or sulfate products), or poor water quality, field modified by unauthorized personnel, damaged by flood, fire, or other acts of nature, or which have altered or missing serial numbers.
6. DUKERS does not recommend or authorize the use of any product(s) in a non-commercial application, including but not limited to residential use. The use or installation of product(s) in non-commercial applications renders all warranties, expressed or implied, including the warranties of MERCHANTABILITY and FITNESS FOR A PARTICULAR PURPOSE, null and void, including any responsibility for damage, cost and legal actions re suiting from the use or installation of product(s) in any non-commercial setting
7. Adjustments such as calibrations, leveling, tightening of fasteners or utility connections normally associated with original installation are the responsibility of the installer and not that of DUKERS
8. Exception to the 1 year warranty period is as listed:
   Fry Tanks:
   If tank is found to be leaking within the first year of operation from date of installation and verified by an authorized service agency, the entire fryer will be replaced. Replacement fryer will be warranted for the balance of the original warranty. Original purchased replacement parts manufactured by DUKERS Will be warranted for 90 days from the parts invoice date. This warranty is or parts cost only, and does not include freight or labor charges. Exceptions are stainless steel fr tanks which will be warranted as stated in item
9. This states the exclusive remedy against DUKERS relating to the product(s),

whether in contract or in tort or under any other legal theory, and whether arising out of warranties, representations, instructions, installations or defects from any cause. DUKERS shall not be liable, under any legal theory, for loss of use, revenue or profit, or for substituted use or performance, or for incidental, indirect, or special or consequential damages or for any other loss of cost of similar type

10. THIS WARRANTY AND THE LIABILTIES SET FORTH HEREIN ARE EXCLUSIVE AND IN LIEU OF ALL OF THEIRLIABILITES AND WARRANTIES, EXPRESSED OR IMPLIED, INCLUDING BUT NOT LIMITED TO, IMPLIED WARRANTIES OR MERCHANTABILITY AND FITNESS FOR PARTICULAR PURPOSE AND CONSTITUTES THE ONLY WARRANTY OF DUKERS WITH RESPOECT TO THE PRODUCT(S)

DUKERS APPLIANCE CO., USA LTD
TOLL FREE: 1-800-931-8628 | FAX: 562-801-3026
INFO@DUKERSUSA.COM | WARRANTY@DUKERSUSA.COM
CORPORATE OFFICE: 2488 PECK ROAD, CITY OF INDUSTRY, CA 90601
WWW.DUKERSUSA.COM