ALTO-SHAAM

Quickchiller

QC3-100
(Shown with roll-in cart)

QC3-40

quickchiller™

ecosmart®

QC3-3
QC3-20
QC3-40
QC3-100
QC3-100/NT (Narrow Trolley)
QC3-100 Remote

QC3-20

QC3-3

- **Installation**
- **Operation**
- **Maintenance**

W164 N9221 Water Street • P.O. Box 450
Menomonee Falls, Wisconsin 53052-0450 U.S.A.

PHONE: 262.251.3800 • 800.558.8744 U.S.A. / CANADA
FAX: 262.251.7067 • 800.329.8744 U.S.A. ONLY
www.alto-shaam.com

Consult instructions for operation and use.

24•7 Your Service Hotline 1-800-558-8744

Printed in U.S.A.

MN-38954 (Rev. 6) • 02/20

Table of Contents

Warranty and Service Information 3
Delivery 4
Transportation Damage and Claims 5
Unpacking 6
Safety Procedures 7
Installation 9
Dimensions 13
Accessories 18
Electrical Connection 19
Operation 20
Cleaning and Preventative Maintenance 39
Troubleshooting 41
Service 42
Limited Warranty 64

Enjoy your Alto-Shaam Quickchiller™!

Rapid Cooling

Protect and serve your food and your customers. Quickchiller blast freezer/chiller systems are designed to rapidly and uniformly decrease the temperature of hot foods well within HACCP and FDA requirements. Reduce daily production times and requirements by producing food up to five days in advance and simply rethermalize based upon demand.

Protect your original manufacturer's warranty

Register

Registering your appliance ensures prompt service in the event of a warranty claim. You will also receive direct notifications of software updates and additional product information.

Your personal information will not be shared with any other company.

www.alto-shaam.com/warranty

Alto-Shaam 24/7 Emergency Repair Service

Call

Call 800-558-8744 to reach our 24-hour emergency service call center for immediate access to local authorized service agencies outside standard business hours. The emergency service access is provided exclusively for Alto-Shaam equipment and is available throughout the United States through Alto-Shaam's toll free number.

Availability

Emergency service access is available seven days a week, including holidays.

Delivery

This Alto-Shaam appliance has been thoroughly tested and inspected to ensure only the highest quality appliance is provided. Upon receipt, check for any possible shipping damage and report it at once to the delivering carrier. See Transportation Damage and Claims section located in this manual.

This appliance, including unattached items and accessories, may be delivered in one or more packages. Ensure all standard items and options have been received with each appliance as ordered. Save all the information packed with the appliance. Register the appliance online at *www.alto-shaam.com/en/support/warranty-registration* to ensure prompt service in the event of a warranty parts and labor claim.

This manual must be read and understood by all people using or installing the appliance. Contact the Alto-Shaam Tech Team Service Department if you have any questions concerning installation, operation, or maintenance.

1-800-558-8744; servicedept@alto-shaam.com

The serial number is required for all inquiries.

Always include both model and serial number(s) in any correspondence regarding the appliance.

Model: _____

Serial number: _____

Purchased from: _____

Date installed: _____ **Voltage:** _____

⚠ CAUTION

Appliance and accessories may be heavy. To prevent serious injury, **always** use a sufficient number of trained and experienced workers when moving or leveling appliance and handling accessories.

Environmental Conditions

Operational Environmental Conditions

- Before use, appliance must acclimate to room temperature in the environment it is placed — 24 hours is recommended.
- Ambient temperature range of 60°F to 110°F (16°C to 43°C).
- Relative humidity of less than 95% non-condensation.
- Atmospheric pressure range of 50kPa to 106kPa.

Transportation Damage and Claims

All Alto-Shaam equipment is sold Free on Board (F.O.B.) shipping point, and when accepted by the carrier, such shipments become the property of the consignee.

Should damage occur in shipment, do not put the appliance into service until the damage has been inspected by an authorized Alto-Shaam service provider.

Shipping damages are a matter between the carrier and the consignee. In such cases, the carrier is assumed to be responsible for the safe delivery of the merchandise, unless negligence can be established on the part of the shipper.

1. Make an immediate inspection while the appliance is still in the truck or immediately after it is moved to the receiving area. Do not wait until after the appliance is moved to a storage area.
2. Do not sign a delivery receipt or a freight bill until a proper count has been made and inspection of all appliances are received.
3. Note all damage to packages directly on the carrier's delivery receipt.
4. Make certain the driver signs the delivery receipt. If the driver refuses to sign, make a notation of this refusal on the receipt.
5. If the driver refuses to allow inspection, write the following on the delivery receipt: **Driver refuses to allow inspection of containers for visible damage.**
6. Contact the carrier's office immediately upon finding damage, and request an inspection. Mail a written confirmation to the carrier's office with the time, date, and the person called.
7. Save any packages and packing material for further inspection by the carrier.
8. Promptly file a written claim with the carrier and attach copies of all supporting paperwork.

Alto-Shaam will continue our policy of assisting our customers in collecting claims which have been properly filed and actively pursued. Alto-Shaam cannot, however, file any damage claims, assume the responsibility of any claims, or accept deductions in payment for such claims.

Record the model and serial number of the appliance for easy reference. Always refer to both model and serial number in any contact with Alto-Shaam regarding this appliance.

Model: _____

Serial Number: _____

Date Installed: _____

Voltage: _____

Purchased From: _____

_____

_____

Alto-Shaam has established a twenty-four hour emergency service call center to offer immediate customer access to a local authorized service agency outside of standard business hours. The emergency service access is provided exclusively for Alto-Shaam equipment and is available throughout the United States through the use of Alto-Shaam's toll-free number. Emergency service access is available seven days a week including holidays.

Unpacking

- Carefully remove the appliance from the carton or crate.

  NOTE: Do not discard the carton and other packaging material until you have inspected the appliance for hidden damage and tested it for proper operation.

  Do not discard this manual. This manual is considered to be part of the appliance and is to be provided to the owner or manager of the business or to the person responsible for training operators. Additional manuals are available from the manufacturer.

- Read all instructions in this manual carefully before installing this appliance, using the appliance or performing routine maintenance. Following procedures other than those indicated in this guide to use and clean the appliance is considered inappropriate and may cause damage, injury or fatal accidents, in addition to voiding the warranty and relieving Alto-Shaam of all liability.
- Remove all protective plastic film, packaging materials, and accessories from the appliance before connecting electrical power. Store any accessories in a convenient place for future use.

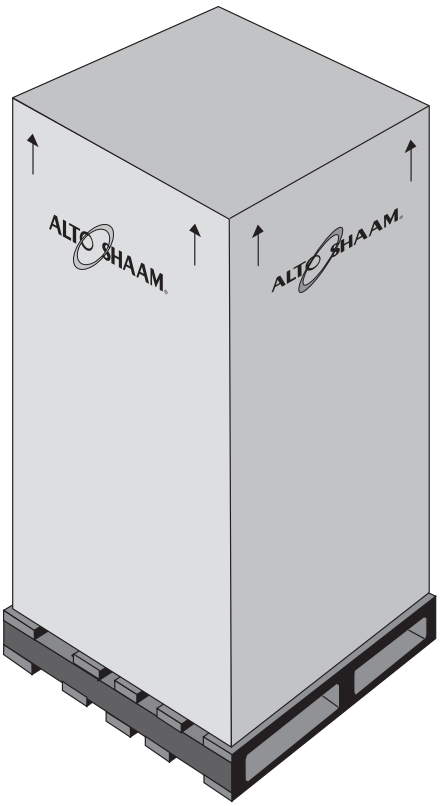

- The appliance is intended to cook, hold or process foods for the purpose of human consumption. No other use for this appliance is authorized and is therefore considered dangerous. The appliance must not be used to cook food containing flammable materials (such as food with alcohol). Substances with a low flash point can ignite spontaneously and cause a fire.
- The appliance is intended for use in commercial establishments where all operators are familiar with the purpose, limitations, and associated hazards of this appliance. Operating instructions and warnings must be read and understood by all operators and users. Alto-Shaam recommends regular staff training to avoid the risk of accident or damage to the appliance. Operators must also receive regular safety instructions.
- Any troubleshooting guides, component views, and parts lists included in this manual are for general reference only and are intended for use by qualified and trained technicians.
- This manual should be considered a permanent part of this appliance. This manual and all supplied instructions, diagrams, schematics, parts lists, notices, and labels must remain with the appliance if the item is sold or moved to another location.

NOTICE: For equipment delivered for use in any location regulated by the following directive: 2012/95/EC WEEE

Do not dispose of electrical or electronic equipment with other municipal waste.

Knowledge of proper procedures is essential to the safe operation of electrically and/or gas energized equipment. The following signal words and symbols may be used throughout this manual.

⚠ DANGER

Indicates a hazardous situation that, if not avoided, will result in death or serious injury.

⚠ WARNING

Indicates a hazardous situation that, if not avoided, could result in death or serious injury.

⚠ CAUTION

Indicates a hazardous situation that, if not avoided, could result in minor or moderate injury.

NOTICE: Indicates information considered important, but not hazard-related (e.g., messages relating to property damage).

Indicates that referral to operating instructions is recommended to understand operation of equipment.

Safety Procedures

- To prevent serious injury, death or property damage, the appliance should be inspected and serviced at least every twelve (12) months by an authorized service partner or trained technician.
- **Only** allow an authorized service partner or trained technician to service or to repair the appliance. Installation or repairs that are not performed by an authorized service partner or trained technician, or the use of non-factory authorized parts will void the warranty and relieve Alto-Shaam of all liability.
- When working on this appliance, observe precautions in the literature, on tags, on labels attached to or shipped with the appliance and other safety precautions that may apply.
- If the appliance is installed on casters, freedom of movement of the appliance must be restricted so that utility connections (including gas, water, and electricity) cannot be damaged when the appliance is moved. If the appliance is moved, ensure that all utility connections are properly disconnected. If the appliance is returned to its original position, ensure that retention devices and utility connections are properly connected.
- **Only** use the appliance when it is stationary. Mobile appliance racks, mobile plate racks, transport trolleys, and appliances on casters can tip over when being moved over an uneven floor or threshold and cause serious injury.
- **Always** apply caster brakes on mobile appliances or accessories when these are not being moved. These items could move or roll on uneven floors and cause property damage or serious injury.

⚠ WARNING

This appliance is not intended for use by persons (including children) with reduced physical, sensory or mental capabilities, or lack of experience and knowledge, unless they have been given supervision concerning use of the appliance by person responsible for their safety.

Children should be supervised to ensure that they do not play with the appliance.

⚠ WARNING

Improper installation, alteration, adjustment, service, cleaning, or maintenance could result in property damage, severe injury, or death.

Read and understand the installation, operating and maintenance instructions thoroughly before installing, servicing, or operating this equipment.

⚠ CAUTION

Appliance and accessories may be heavy. To prevent serious injury, **always** use a sufficient number of trained and experienced workers when moving or leveling appliance and handling accessories.

5-Year Limited Warranty on self-contained compressor
Effective from date of shipment. (excludes labor)

Site Installation

Position the Quickchiller to allow sufficient air ventilation through the condensing unit(s).

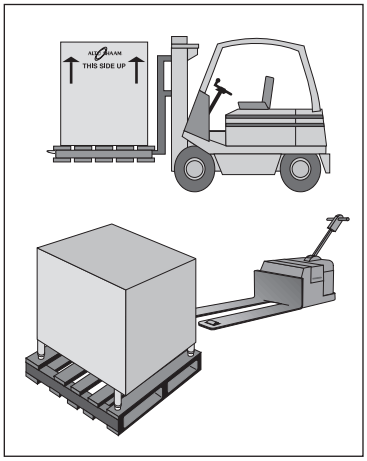

Avoid installing the chiller immediately adjacent to fryers, charbroilers, or any other equipment producing grease laden air; heat producing equipment such as ovens and ranges; and steam discharging equipment such as steamer ovens and kettles. Do not install the Quickchiller in direct sunlight.

Allow sufficient front clearance for serviceability and for easy maneuvering of food trolleys in and out of the cabinet.

Clearance Requirements	
Top	0" (0mm)
Each Side	1" (25mm)
18" (457mm) minimum from heat producing equipment	

Installation

Prior to moving the Quickchiller to the installation site, check the dimensions of doors, passageways, and ceiling heights in the areas through which the cabinet must be moved. Also check the turning radius if the cabinet must be moved around an existing structure. The use of a fork lift or pallet lift truck is required for moving and leveling most Quickchiller models.

NOTICE: In certain instances, it may be necessary to remove doors and door hardware to negotiate tight spaces.

Installation Requirements

Do not tip Quickchiller on its side.

If tipped, Quickchiller must stand in the upright position for a minimum of 12 hours before operating. Tipping will cause damage to the chiller and void the warranty if not left in an upright position for a minimum of 12 hours before operating.

— Quickchiller must be installed level.

— The Quickchiller must not be installed in any area where it may be affected by steam, grease, dripping water, extreme temperatures, or any other severely adverse conditions.

In order to maintain standards established by the National Sanitation Foundation, all counter mounted Quickchillers must use legs that allow for a 4" (102mm) clearance between the Quickchiller and the counter.

Installation

Installation Requirements

The model QC3-3 is a counter mounted Quickchiller and must use legs that allow for a 4" (102mm) clearance between the cabinet and the counter.

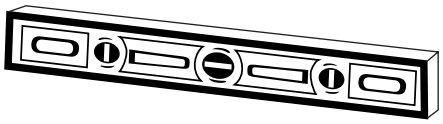

For all other models, install the Quickchiller on a smooth and level floor surface. Use the adjustable cabinet legs to level the Quickchiller.

Adjust from front-to-back and from side-to-side to evenly distribute the cabinet weight and avoid pulling the cabinet alignment out of square.

After leveling the cabinet, check that the door handle is aligned properly. Also check the height relationship of the optional roll-in cart to the cabinet. Adjust the Quickchiller height as needed to accommodate the cart and to securely close the Quickchiller door.

Door Seal:

Check the door gasket to make certain it is sealing properly and that the gasket provides an even and positive seal around the entire door frame.

Refrigeration (QC3-100R Remote)

Alto-Shaam does not offer recommendations on maximum run sizes. Best refrigeration piping practices should always be followed and piping for any longer runs is the responsibility of the installer.

⚠ CAUTION

Appliance and accessories may be heavy. To prevent serious injury, **always** use a sufficient number of trained and experienced workers when moving or leveling appliance and handling accessories.

How to install the QC3-100 trolley guides

1. Align each guide rail with the holes located under the cabinet. **(A)**
2. Fasten each guide rail with washer, lock washer and bolt.

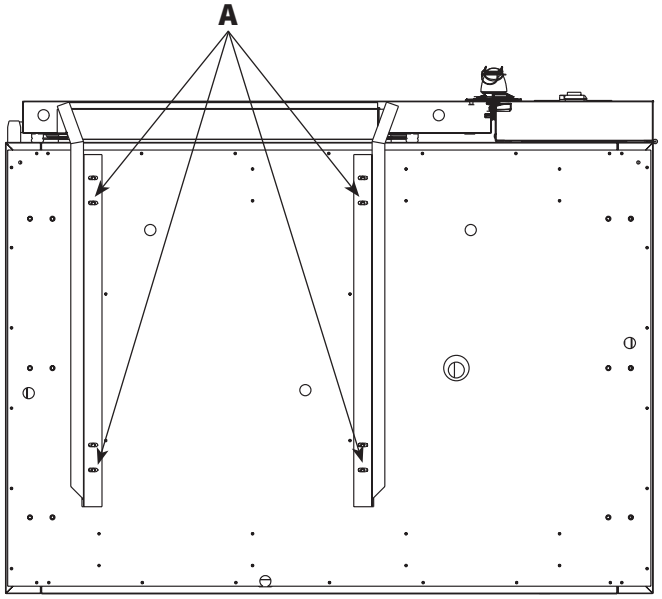

3. Push the roll-in cart (trolley) into the Quickchiller and close the door.
4. At the front of the Quickchiller, make certain contact has been made between the Quickchiller and the cart along the total width of the door to create a complete seal. When a full seal has been determined, recheck each connection to make certain it has been fully tightened.

How to install legs on QC3-100

1. Avoiding trolley guides and drain, carefully lift Quickchiller off of floor with forklift just high enough to fit leg assembly **(1)** and tools.
2. Pound feet **(2)** into frame **(1)**.
3. Align frame with holes on the bottom of the Quickchiller. Insert screws **(4)** through nut inserts **(3)** and attach to frame using a 3/8" socket.
4. Adjust feet accordingly to level the Quickchiller.

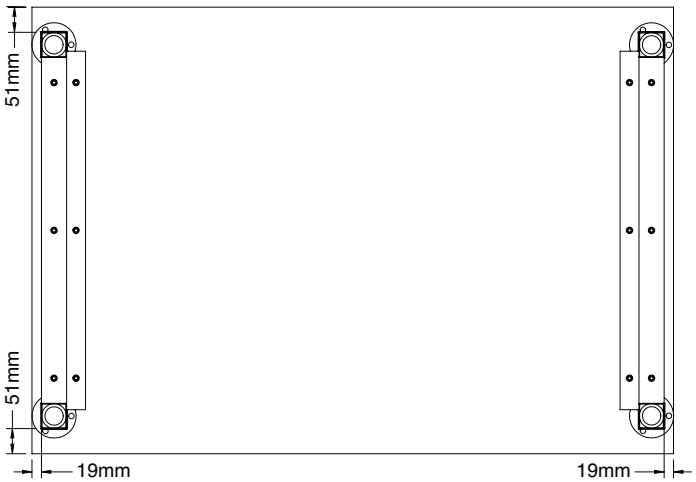

Leg Assembly (5016746)

Item	Part	Description	Qty.
1	5016745	Frame, Legs	2
2	FE-23822	Feet, Adjustable, Flanged	4
3	NU-24613	Nut, Insert 1/4-20	12
4	SC-25286	Screw, 1/4-20 x 3/4" Flanged Head	12

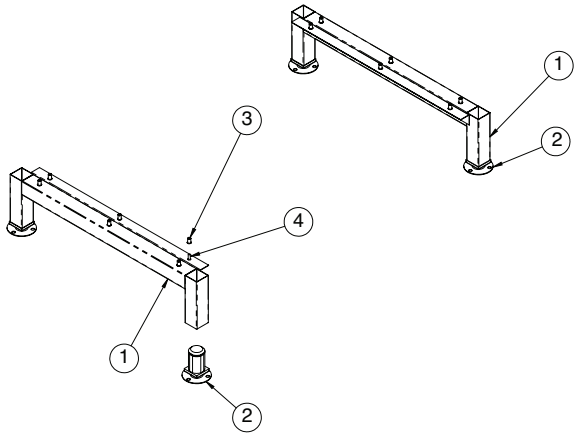

It is recommended that legs be attached to the Quickchiller before installing drain assembly.

Water Drainage

A 1" NPS drain is located under the QC3-100. Connect the drain pipe using Teflon tape to discharge through an indirect waste pipe into an open-site drain by means of a 2" (51mm) air gap. Connection must be within 10' (3m) of the Quickchiller.

NOTICE: In the U.S.A., this equipment is to be installed to comply with the Basic Plumbing Code of the Building Officials and Code Administrators International, Inc. [BOCA], and the Food Service Sanitation Manual of the Food & Drug Administration [FDA].

Drainage		
QC3-3	**QC3-20**	**QC3-40**
Evaporator Pan: No installation required		
QC3-100		
One (1) Floor Drain: 1/2" (12,7mm) Diameter		

QC3-100 Bottom View

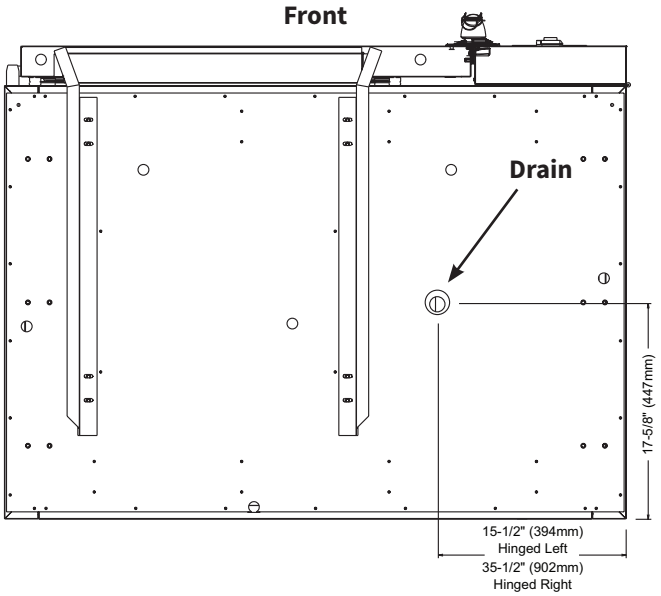

Installation

How to adjust hinges

Hinges can be modified for a left or right-hand door.

1. Remove hinge cover **(1)**.
2. Remove screws from hinge **(2)**.
3. Remove metal cap **(3)**.
4. Insert flat screwdriver into slot and pry out **(4)**. Rotate cam so that deep grove is positioned to the right for left-hand hinge, or left for right-hand hinge **(5)**.
5. Lock metal cap back into place. Replace screws, and hinge cover.

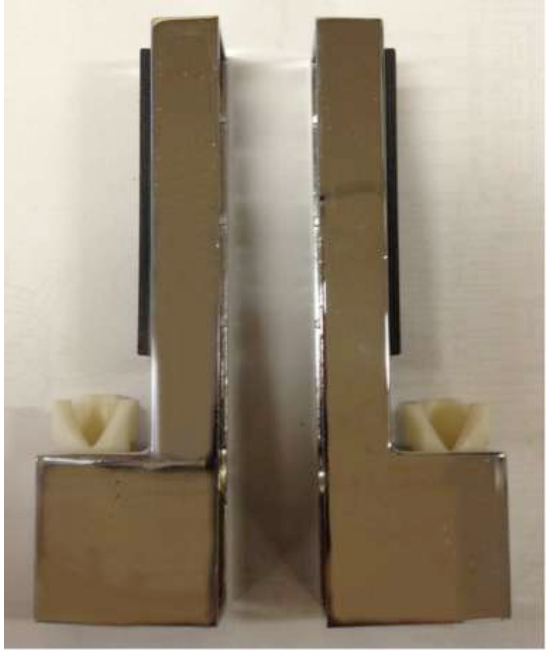

Left-Hand Hinge Position **5** Right-Hand Hinge Position

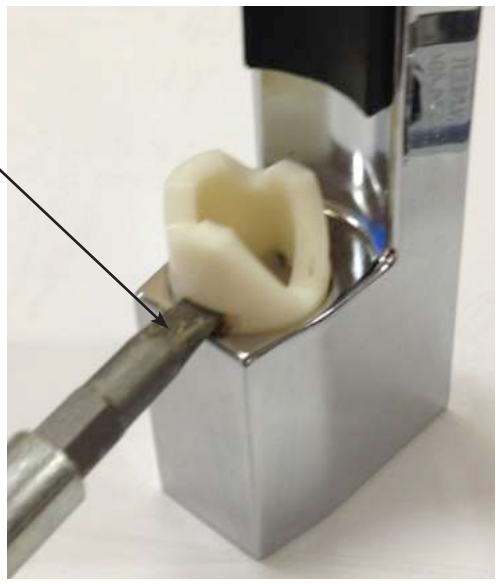

QC3-3

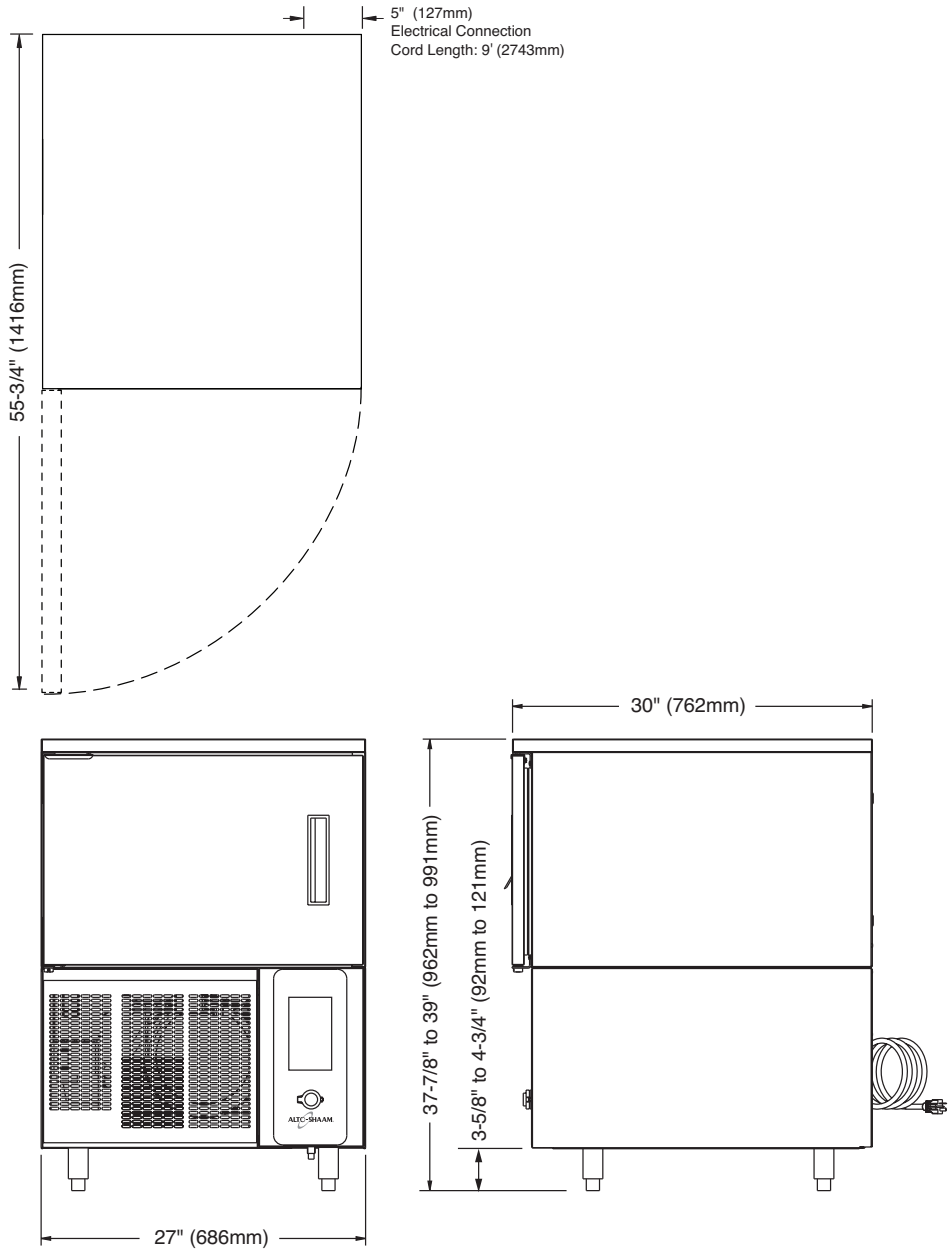

Weight	
Net: Contact factory	**Ship:** 330 lb (150 kg)
Carton dimensions: (L x W x H) 35" x 35" x 42" (889mm x 889mm x 1067mm)	

Refrigeration
40 oz. R404a Refrigerant
One (1) 1/2 hp Condensing Unit: Freeze mode: 2,800 BTU's per hour at -5°F (-21°C) Chill mode: 4,750 BTU's per hour at +20°F (-7°C)

Product/Pan Capacity	
Maximum chilling capacity (approx.)	36 lb (16 kg)
Maximum volume	22-1/2 quarts (28,5 liters)
Full-size pans 20" x 12" x 2-1/2"	Three (3)
Gastronorm 1/1 530mm x 325mm x 65mm	Three (3)

Dimensions

QC3-20

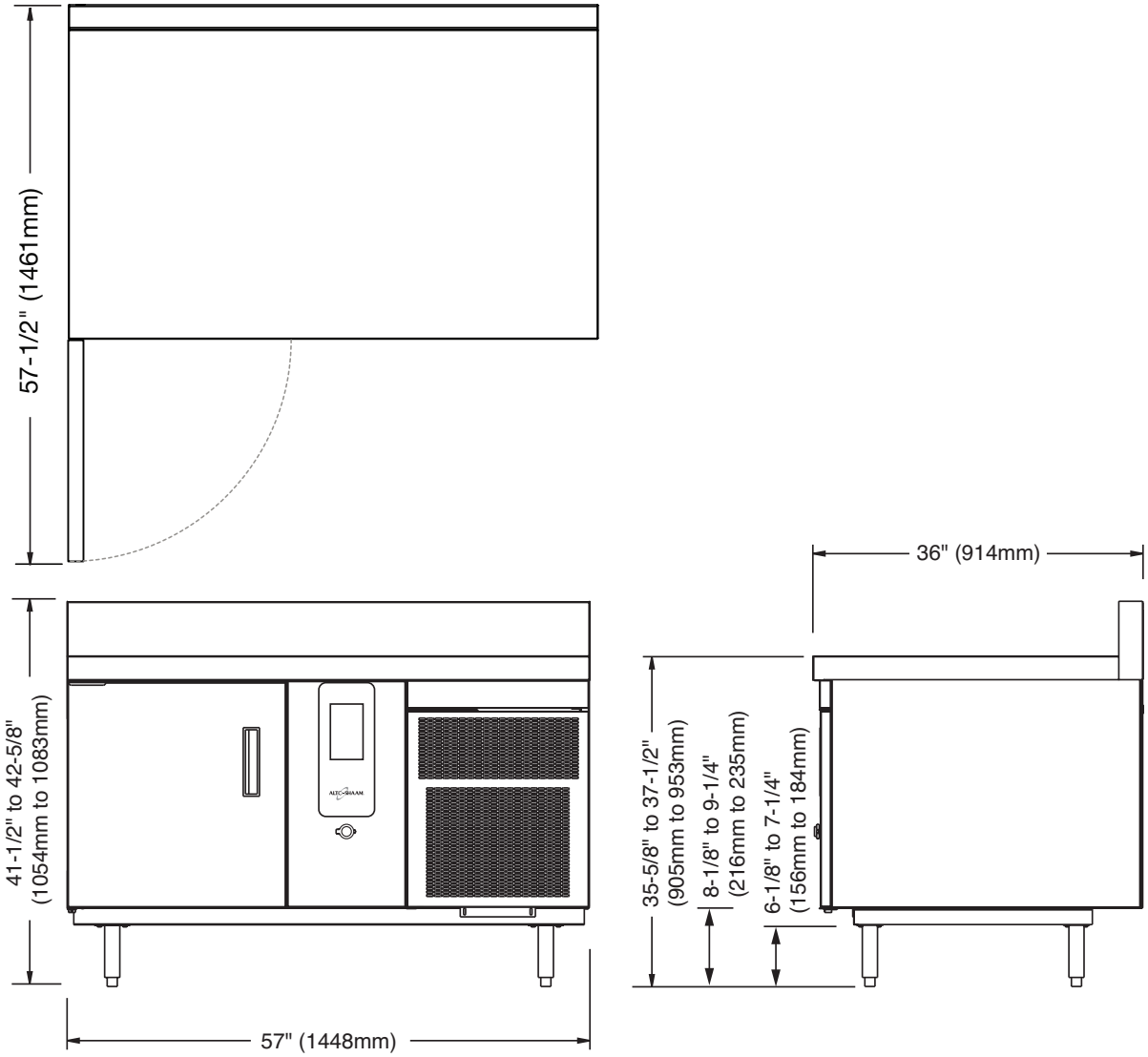

Weight	
Net: Contact factory	**Ship:** 450 lb (204 kg)
Carton dimensions: (L x W x H) 60" x 39" x 48-1/2" (1524mm x 991mm x 1232mm)	

Refrigeration
40 oz. R404a Refrigerant
One (1) 3/4 hp Condensing Unit: Freeze mode: 4,380 BTU's per hour at -5°F (-21°C) Chill mode: 7,080 BTU's per hour at +20°F (-7°C)

Product/Pan Capacity	
Maximum chilling capacity (approx.)	60 lb (27 kg)
Maximum volume	37.5 quarts (47,5 liters)
Full-size pans 20" x 12" x 2-1/2"	Five (5)
Gastronorm 1/1 530mm x 325mm x 65mm	Five (5)
Full-size sheet pans 18" x 26" x 1"	Nine (9)

QC3-40

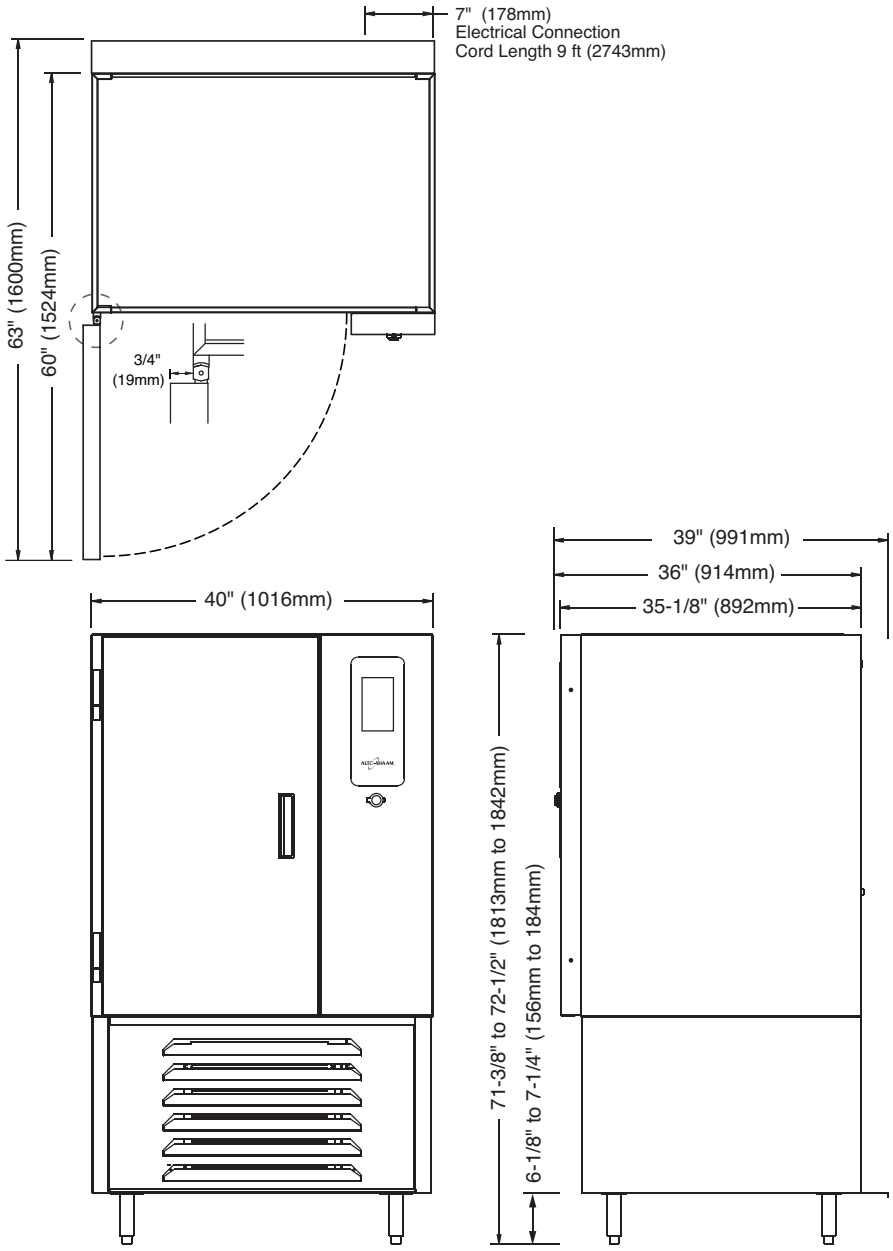

Weight	
Net: Contact factory	**Ship:** 815 lb (370 kg)
Carton dimensions: (L x W x H) 55-1/2" x 45-1/4" x 87" (1410mm x 1149mm x 2210mm	

Refrigeration
80 oz. R-404a Refrigerant
One (1) 1-1/2 hp Condensing Unit: Freeze mode: 5,880 BTU's per hour at -5°F (-21°C) Chill mode: 11,400 BTU's per hour at +20°F (-7°C)

Product/Pan Capacity	
Maximum chilling capacity (approx.)	216 lb (98 kg)
Maximum volume	135 quarts (171 liters)
Full-size pans 20" x 12" x 2-1/2"	Eighteen (18)
Gastronorm 1/1 530mm x 325mm x 65mm	Eighteen (18)
Full-size sheet pans 18" x 26" x 1"	Nine (9)

Dimensions

QC3-100

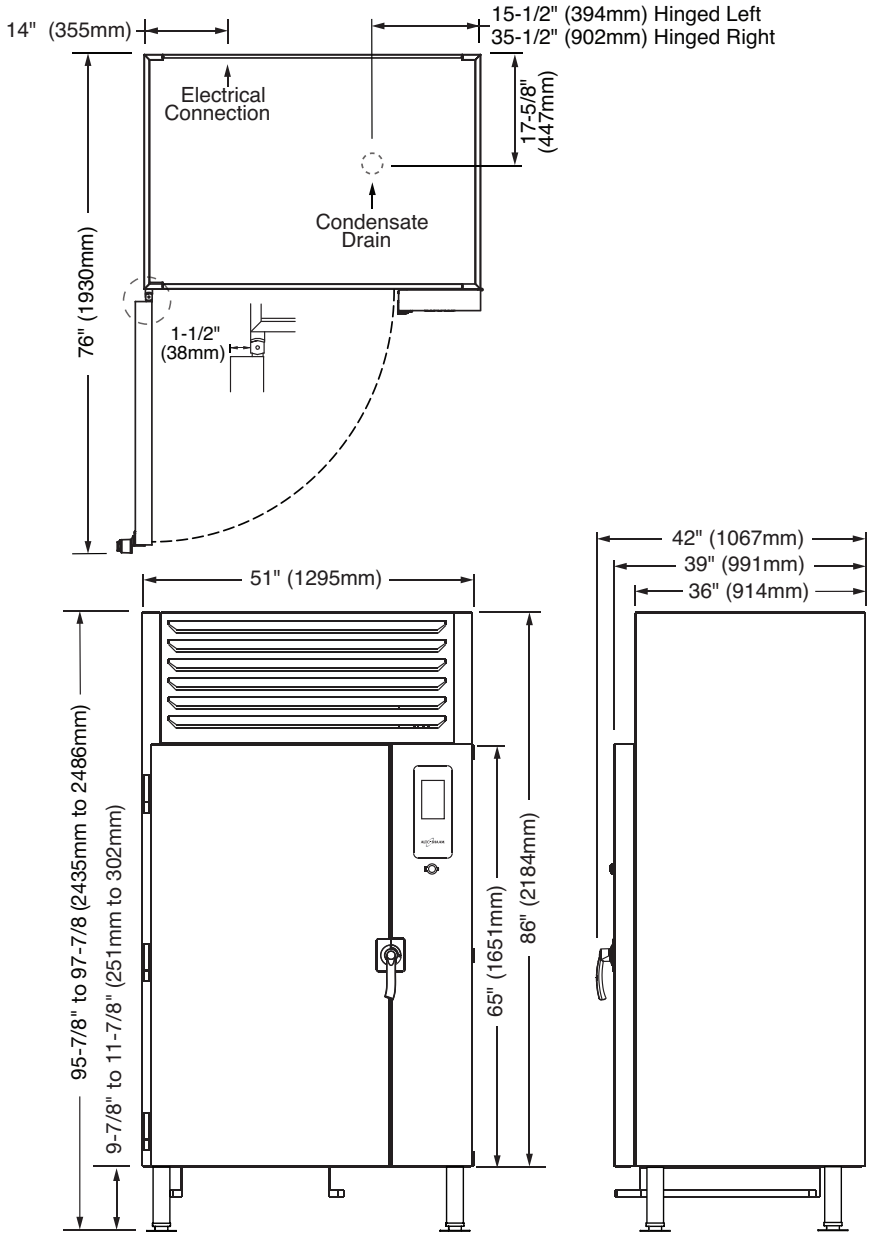

Weight (est.)			
	QC3-100	**Pan Cart**	**Plate Cart**
Net	1000 lb (454 kg)	120 lb (54 kg)	Contact factory
Ship	1186 lb (538 kg)	161 lb (73 kg)	Contact factory
Carton dimensions: (L x W x H) 57" x 44" x 94" (1448mm x 1118mm x 2388mm)			

Refrigeration
200 oz. R-404a Refrigerant
One (1) 3 hp Condensing Unit: Freeze mode: 11,300 BTU's per hour at -5°F (-21°C) Chill mode: 21,600 BTU's per hour at +20°F (-7°C)

Product/Pan Capacity	
Maximum product capacity (approx.)	480 lb (218 kg)
Maximum product volume	300 quarts (380 liters)
Maximum chilling capacity (approx.)	240 lb (109 kg)
Maximum chilling volume	150 quarts (190 liters)
Full-size pans 20" x 12" x 2-1/2"	Forty (40)
Gastronorm 1/1 530mm x 325mm x 65mm	Forty (40)
Full-size sheet pans 18" x 26" x 1"	Twenty (20) Additional optional wire shelves required.

QC3-100R

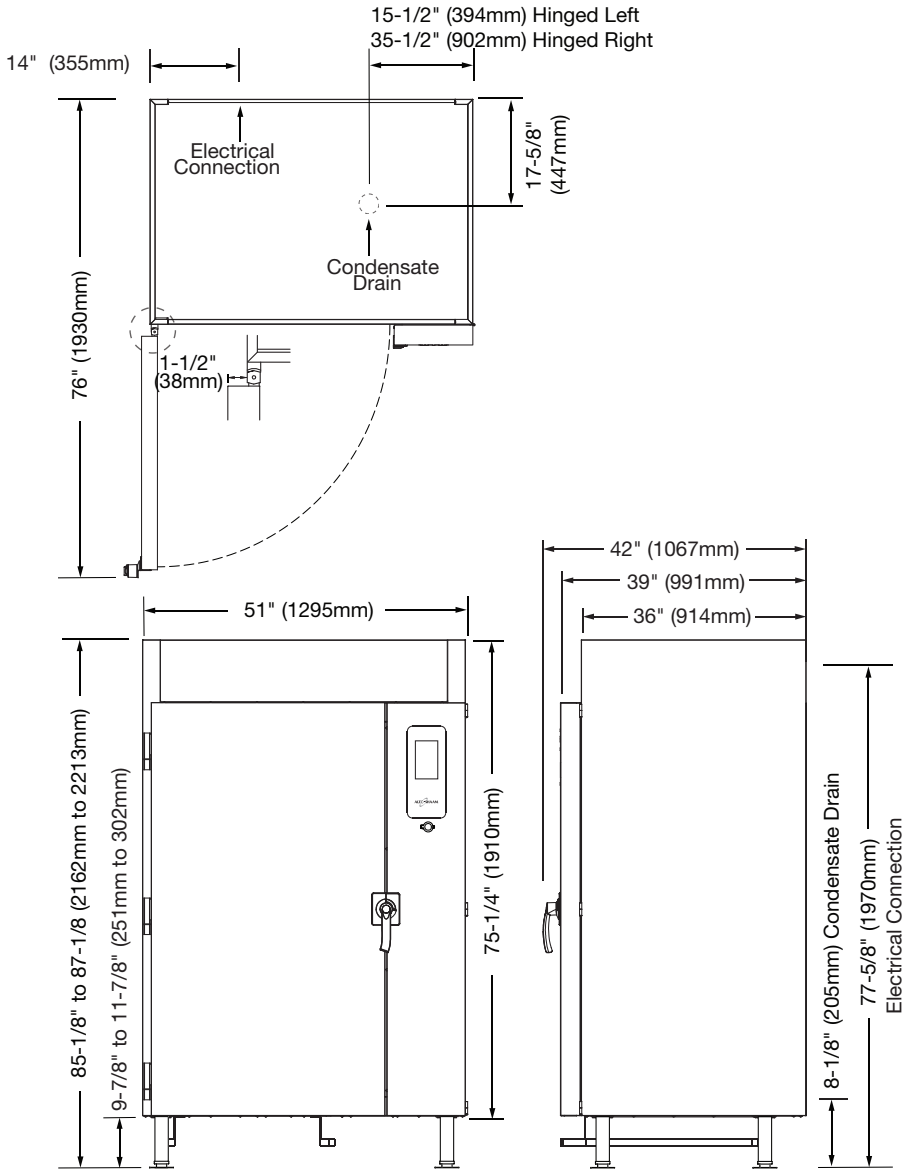

Weight (est.)			
	QC3-100R	**Pan Cart**	**Plate Cart**
Net	Contact factory	120 lb (54 kg)	Contact factory
Ship	Contact factory	161 lb (73 kg)	Contact factory
Carton dimensions: (L x W x H) 57" x 44" x 93" (1448mm x 1118mm x 2362mm)			

Remote BTU Requirements
Freeze mode: 14,690 BTU's at 90°F ambient -5°F (-21°C) evaporator temperature

Product/Pan Capacity	
Maximum product capacity (approx.)	480 lb (218 kg)
Maximum product volume	300 quarts (380 liters)
Maximum chilling capacity (approx.)	240 lb (109 kg)
Maximum chilling volume	150 quarts (190 liters)
Full-size pans 20" x 12" x 2-1/2"	Forty (40)
Gastronorm 1/1 530mm x 325mm x 65mm	Forty (40)
Full-size sheet pans 18" x 26" x 1"	Twenty (20) Additional optional wire shelves required.

Accessories

Model >	QC3-3	QC3-20	QC3-40	QC3-100	QC3-100/NT Narrow Trolley
Casters, 3" (76mm) [set of 4]	5014890	—	—	—	—
Casters, 5" (127mm) [set of 4]	5014751	5014751	5014751	—	—
Legs, 6" (152mm) for countertop applications [set of 4]	5014889	5014889	5014889	—	—
Legs, 9" (229mm) for floor standing applications [set of 4]	5014891	—	—	—	—
Prechill Sealing Strip	—	—	—	5016989	contact factory
Roll-in Pan Cart 20 shelf pan trolley - Fits 20-20E, 20-20G, 20-20MW, and QC3-100 69-1/2" x 26-1/8" x 34-3/8" (1766 x 661 x 873mm) 2-9/16" (65mm) vertical spacing between shelves	—	—	—	5026385 5026431 (CI)	—
20 shelf pan trolley - Fits 20-10E, 20-10G, 20-20MW, and QC3-100/NT 69-1/2" x 18-1/8" x 29-11/16" (1766 x 475 x 753mm) 2-9/16" (65mm) vertical spacing between shelves	—	—	—	—	5026388 5026434 (CI)
Roll-in Plate Cart 102 plate trolley - Fits 20-20E, 20-20G, 20-20MW, and QC3-100 69-5/8" x 26-7/8" x 42-1/2" (1769 x 683 x 1080mm) 3" (77mm) vertical spacing between shelves	—	—	—	5026387 5026433 (CI)	—
84 plate trolley - Fits 20-20E, 20-20G, 20-20MW, and QC3-100 69-5/8" x 26-7/8" x 42-1/2" (1769 x 683 x 1080mm) 3-11/16" (93mm) vertical spacing between shelves	—	—	—	5026386 5026432 (CI)	—
60 plate trolley - Fits 20-10E, 20-10G, 20-20MW, and QC3-100/NT 69-13/16" x 18-3/4" x 37-1/8" (1773 x 475 x 943mm) 2-9/16" (66mm) vertical spacing between shelves	—	—	—	—	5026390 5026438 (CI)
51 plate trolley - Fits 20-10E, 20-10G, 20-20MW, and QC3-100/NT 70" x 18-3/4" x 37-1/8" (1778 x 475 x 943mm) 3-1/16" (77mm) vertical spacing between shelves	—	—	—	—	5026389 5026435 (CI)
Wire Shelves, Stainless Steel	—	—	SH-22584	SH-22473	SH-2903
Wire Shelves, Coated	SH-35114	SH-35115	—	—	—
Side Racks [2 required] - Ten (10) non-tilt pan slides spaced on 1.9" (48mm) centers	—	SR-29969	—	—	—
Side Rack Pin, Long [2 required]	—	PI-29939	—	—	—
Side Rack Pin, Short [4 required]	—	PI-35828	—	—	—
Side Rack Holder [2 required]	—	BT-29942	—	—	—
Stacking Kit, 7-20 over QC3-20	—	5015155	—	—	—

CI - Correctional institution

SR-35827 - Slide in Rack, QC3-20 (Standard)

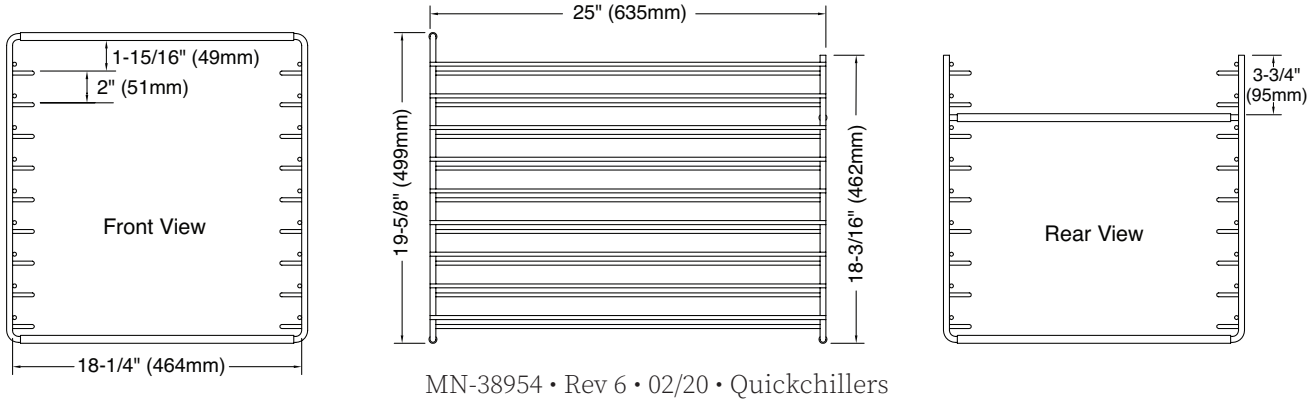

Electrical Connection

WARNING

To prevent SERIOUS INJURY, DEATH or PROPERTY DAMAGE:

All electrical connections must be made by a qualified and trained service technician in accordance with applicable electrical codes.

This Quickchiller must be branch circuit protected with proper ampacities, in accordance with the wiring diagram. The Quickchiller must be properly grounded in accordance with the National Electrical Code and applicable local codes. Wire size for the main incoming power to the Quickchiller must match the minimum size listed in the specifications applicable to the specific Quickchiller model. For supply connections, locate the wire size listed in this manual.

Before operating the chiller, check all cable connections in the electrical connection area for tightness since connections can loosen during transport.

NOTICE: After electrical connections have been completed, operate the Quickchiller in any chilling mode for a period of 15 minutes and recheck the main power connections at the terminal block to make certain they remain tight.

⚠ WARNING

To prevent serious injury, death, or property damage:

All electrical connections must be made by a qualified and trained service technician in accordance with applicable electrical codes.

This appliance must be adequately grounded in accordance with local electrical codes or, in the absence of local codes, with the current edition of the National Electrical Code ANSI/NFPA No. 70. In Canada, all electrical connections are to be made in accordance with CSA C22.1, Canadian Electrical Code Part 1 or local codes.

CE-approved appliances include an equipotential-bonding terminal marked with the symbol shown on the left. Provisions for earthing are to be made in accordance with IEC:2010 60335-1 section 27 or local codes.

V Ph Hz	QC3-3	QC3-20	QC3-40	QC3-100	QC3-100R REMOTE
115V 1 ph 60 Hz Recommended circuit amperage: Plug configuration:	16A, 1.8kW 20 amps NEMA 5-20P	16A, 1.8kW 20 amps NEMA 5-20P	Not available	Not available	Not available
115/208-230V 1 ph 60 Hz Recommended circuit amperage: Recommended wire size or plug:	Not available	Not available	16A, 3.7kW 20 amps NEMA 14-20P	24A, 5.5kW 30 amps 4 wire direct	20A, 4.6kW 30 amps 4 wire direct
115/208-230V 3 ph 60 Hz Recommended circuit amperage: Recommended wire size:	Not available	Not available	Not available	16A, 3.7kW 20 amps 5 wire direct	Not available
220V 1 ph 50 Hz Recommended circuit amperage: Recommended wire size or plug:	8A, 1.8kW 20 amps NEMA 5-15P	14A, 1.8kW 20 amps 3 wire direct	20A, 4.4kW 30 amps 3 wire direct	20A, 4.4kW 30 amps 3 wire direct	20A, 4.4kW 30 amps 3 wire direct
380-420V 3 ph 50 Hz Recommended circuit amperage: Recommended wire size:	Not available	Not available	10A, 3.8kW 20 amps 5 wire direct	12A, 4.6kW 20 amps 5 wire direct	7A, 2.7kW 15 amps 5 wire direct

Wire diagrams are located near the top of the Quickchiller, close to the compressor or control panel.

Operation

Operating Introduction

The Alto-Shaam® Quickchiller™ is a processing refrigeration system designed to rapidly and uniformly decrease the temperature of hot foods to either a chilled or frozen state. This process provides enhanced safety, longer storage life and better production efficiency.

Rapid reduction in the temperature of hot foods inhibits the growth of bacteria and provides a safe, five-day chilled food refrigerated storage period from the time of preparation to the time of service. Enhanced storage time offers the food service operation considerable production efficiency. As an example, a daily menu item can be reduced from daily preparation to a preparation schedule consisting of two days per week.

The Alto-Shaam Quickchiller can be effectively utilized in several types of food service programs:

1. Traditional Cook-Serve Kitchens —

Quick chilling can be used to help streamline production in operations where foods are prepared for immediate service. Preparation of labor intensive entrées can be scheduled for production several days before service. Chilling foods provides the ability to rethermalize these items at a later date while maintaining both safety and product quality.

2. Modified Cook-Chill Operations—

where a significant portion of food is cooked for immediate service and a smaller portion of more labor intensive, hot food items are prepared in advance, chilled and reheated when required for service.

3. Full Cook-Chill Operations —

where all hot food production is prepared in advance of service requirements and held in refrigerated prepared food inventories. Hot food preparation takes place over a five-day production schedule.

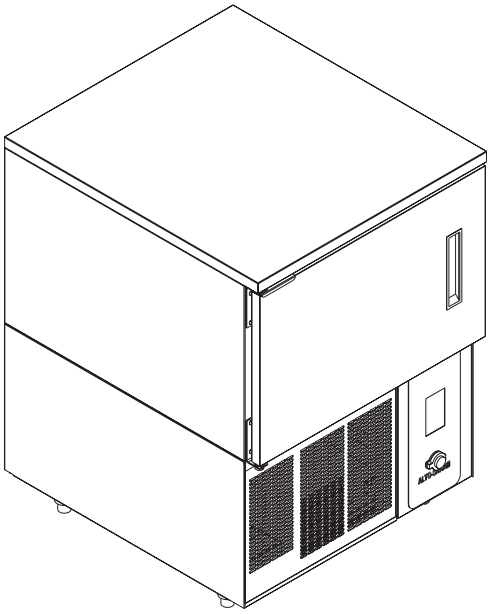

The Quickchiller cooling or freezing process is accomplished with the utilization of large compressors and fans that are electronically controlled through the parameters entered by the operator on the control panel located at the front of the cabinet. The Quickchiller provides the operator with the ability to chill food products to a set cavity temperature by time or by internal product temperature using one or more food probes. When the specified chill time has elapsed or the probe temperature(s) has been reached the Quickchiller will convert to a holding mode at a temperature specified for either refrigeration or frozen product maintenance. The Quickchiller control maintains a record of the length operating time used for each current cycle. After the chill cycle has ended and the Quickchiller is maintaining a holding temperature mode, the chiller control will initiate an automatic defrost cycle when required.

Chill Processing Cycles

The Alto-Shaam Quickchiller uses high velocity cold air circulation to remove heat from prepared foods for the purpose of rapidly reducing temperatures through the danger zone and providing maximum storage life. Cold air is evenly directed across each pan from the control side of every Quickchiller model to assure rapid cooling.

The high velocity cold air produced by the Quickchiller removes insulating layers of warm moist air that surrounds hot products. The rapid removal of these insulating layers of heat reduces food temperatures significantly faster than any other method of temperature reduction and provides enhanced food safety.

Because the basic performance of the Quickchiller relies on high velocity air movement around each container of food, it is important to load the food by placing pans directly into the pan slides. Always use the pan slides to support the edges of 12" x 20" steam table pans (GN 1/1). Use a wire shelf for pan support when using 18" x 26" sheet pans; 12" x 10" steam table pans (GN 1/2); loaf pans; entree plates; and other small containers.

⚠ CAUTION

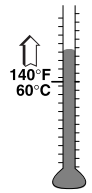

To maintain sanitation control, all foods for quick-chill or quick-freeze processing must be at a temperature above 140°F (60°C) and must be tightly covered.

Quickchiller Operation Modes

➤ Processing with the use of probes

Probe usage provides chill or frozen food processing activation and termination through use of a food probe or probes inserted into the center of the food. The cycle is automatically terminated when the center of the food reaches the probe sensing temperature set by the operator. In Quickchillers with multiple probes, all probes must reach the sensing temperature set by the operator to trigger automatic termination of the cycle.

➤ Processing by time

The time mode provides processing activation and termination based on a timed cycle selected by the operator. Upon expiration of the timed cycle, the cabinet automatically reverts to the designated holding cycle temperature.

➤ Holding

Following processing completion, a holding cycle maintains the temperature to safely hold foods after processing. The holding cycle will also maintain a holding compartment temperature between processing cycles.

Prechilling the cabinet

The Quickchiller should be prechilled prior to placing hot foods into the cabinet. In models equipped with an optional roll-in cart (trolley), always maintain an empty food cart inside the chiller when prechilling to eliminate air loss through the bottom of the chiller cabinet door. An optional Prechill Sealing Strip (Item #SA-35079) may also be used for this purpose.

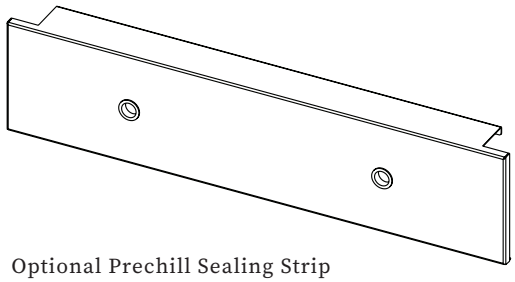

Optional Prechill Sealing Strip
SA-35079

Optional Narrow Prechill Sealing Strip -
Contact factory

Operation

Additional Information

- Clean the Quickchiller and probes prior to use and make certain all processing modes are operating properly before chilling or freezing foods.
- To maintain proper operation, allow the Quickchiller to defrost every 4-10 hours.
- For optimum performance, allow the Quickchiller to prechill for a minimum of 30 minutes before loading pans of food.
- Never overload the Quickchiller.
- It is important to be familiar with and adhere to all local food codes.
- Cook foods properly in preparation for blast chilling or freezing.
- Foods should be portioned into shallow pans to a depth not to exceed 2" (51mm).
- Pans must be covered prior to the chilling or freezing process to prevent food from drying out.
- Always follow the recommended shelf life for chilled food products. Hold chilled foods under refrigeration for a maximum of 5 days including the day of production and the day of consumption.
- According to U.S. food code regulations, all chilled products must be reheated to an internal temperature of 165°F (74°C) prior to serving.

NOTE

Adequate spacing must be allowed between pans for proper air circulation for both processing and subsequent holding. Stacked pans will restrict air flow and increase chill processing time.

Fan Operation

During the initial cooling of the Quickchiller, an evaporator fan delay system will prevent the chilling fans from engaging until the evaporator coil temperature is below 30°F (-1°C). The fans will continue to run until the evaporator coil temperature is above 60°F (16°C).

Defrost

The Quickchiller will trigger an automatic defrost cycle if the defrost period has timed out, and Quickchiller is in Hold mode, has transitioned from Chill to Hold mode, or is in Chill mode and defrost is more than 1 hour overdue and all probes are below 35°F (2°C). If defrost if more than 1 hour overdue, but probes are above 35°F (2°C), the display will indicate an **E-77** error code and the control will produce an audible signal every ten seconds until a defrost is conducted.

Touch Screen Menus

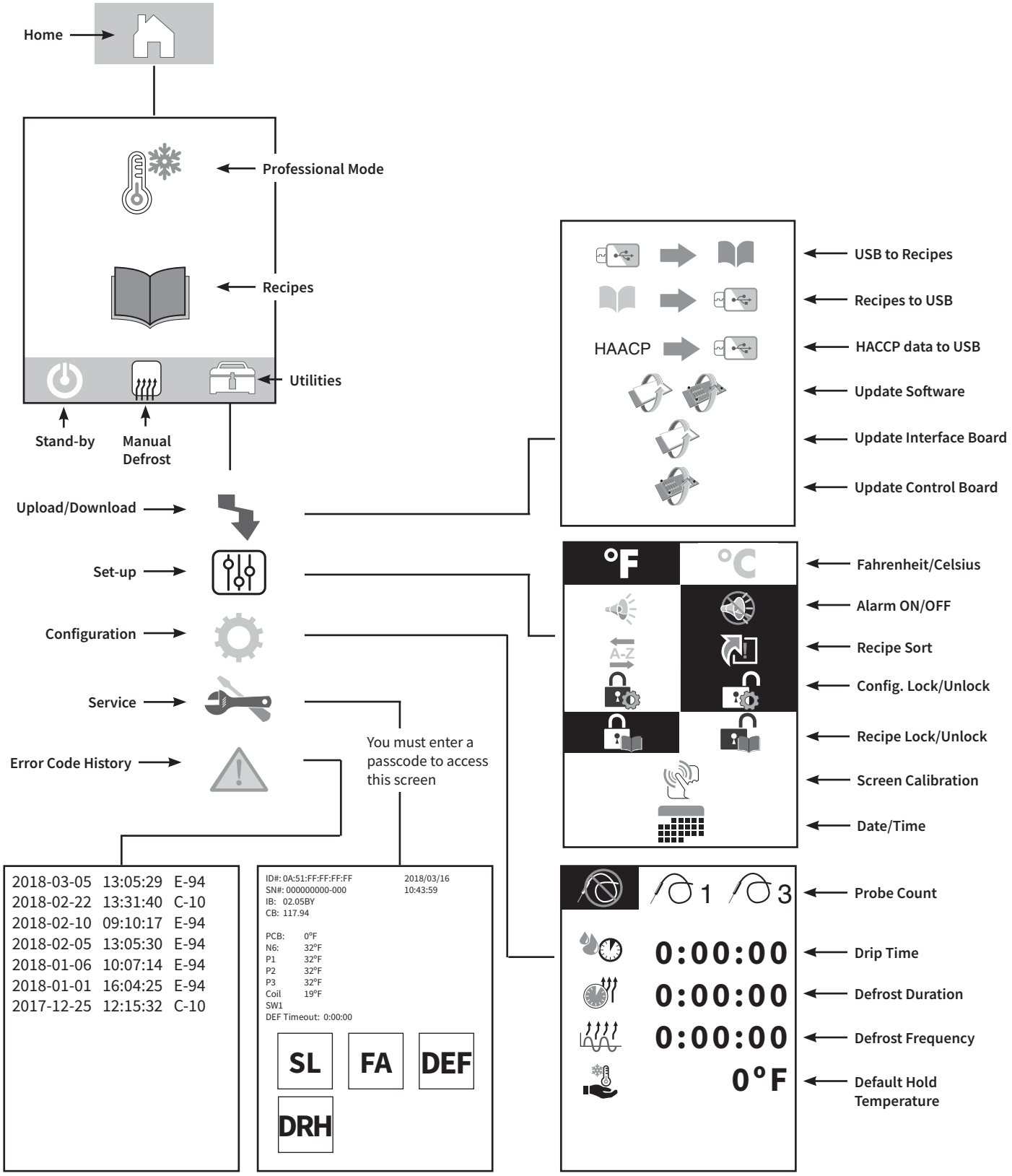

Operation

How to chill using preset recipes

1. Touch to view recipes.
2. Touch < or > to move between recipe screens.
3. Select desired recipe.

Chill cycle will start.

Display will show set points. Touch the icons to display actual temperatures.

Touch < at any time to stop chill cycle.

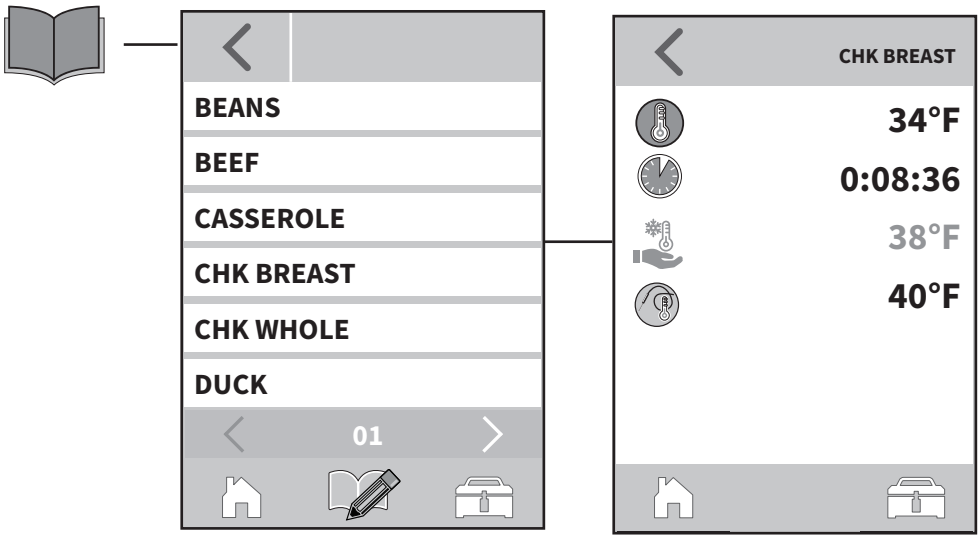

How to delete preset recipes

1. Touch to view recipes.
2. Touch < or > to move between recipe screens.
3. Touch .
4. Select desired recipe.
5. Touch to delete the recipe.
6. Touch to save the change.

How to rearange preset recipes

1. Touch to view recipes.
2. Touch < or > to move between recipe screens.
3. Touch .
4. Select desired recipe.
5. Touch < or > to move the recipe.
6. Touch to save the change.

Chill Modes

Soft Chill … To rapidly decrease the temperature of foods by internal product probe temperature or time within a range of 24°F to 36°F (-4°C to 2°C). Soft Chill is recommended for less dense food items that chill quickly. The mode automatically converts to a refrigerated holding temperature at the end of the chill cycle.

Use **Soft Chill** for less dense items such as fish or vegetables.

Hard Chill … To rapidly decrease the temperature of foods by internal product probe temperature or time within a range of 11°F to 23°F (-11°C to -5°C). Hard Chill is recommended for more dense food items. The mode automatically converts to refrigerated holding temperature at the end of the chill cycle.

Use **Hard Chill** for items such as meats or casseroles.

Quick Freeze … The mode for rapid freezing and frozen food maintenance by internal product probe temperature or time within a temperature range of -10°F to 10°F (-23°C to -12°C). The mode automatically converts to a frozen food holding temperature at the end of the quick freeze cycle.

Use **Quick Freeze** to freeze items and transfer them directly to your freezer.

Hold … The mode for refrigerated storage within a temperature range of -10°F to 40°F (-23°C to 4°C). Hold mode offers continuous refrigerated storage without the utilization of food probes or a timer. The Hold temperature will remain at the preset default temperature.

Use **Hold** mode to hold chilled items at a refrigerated temperature.

Default set points for preset recipes

		Default Set Points		
Preset Recipes	**Mode**	**Chill**	**Probe**	**Hold**
Beans	Hard Chill	14°F	38°F	38°F
Beef	Hard Chill	14°F	38°F	38°F
Casserole	Hard Chill	14°F	38°F	38°F
Chicken Breast	Soft Chill	34°F	38°F	38°F
Chicken Whole	Hard Chill	14°F	38°F	38°F
Duck	Hard Chill	14°F	38°F	38°F
Fish	Soft Chill	34°F	38°F	38°F
Ground Meat	Hard Chill	14°F	38°F	38°F
Lamb	Hard Chill	14°F	38°F	38°F
Lasagna	Hard Chill	14°F	38°F	38°F
Pork	Hard Chill	14°F	38°F	38°F
Potatoes	Hard Chill	14°F	38°F	38°F
Rice	Hard Chill	14°F	38°F	38°F
Sauce	Hard Chill	14°F	38°F	38°F
Sheet Cake	Soft Chill	34°F @ 10 min.	—	38°F
Soup	Hard Chill	14°F	38°F	38°F
Stew	Hard Chill	14°F	38°F	38°F
Stuffing	Hard Chill	14°F	38°F	38°F
Turkey	Hard Chill	14°F	38°F	38°F
Vegetables	Soft Chill	34°F	38°F	38°F

Operation

How to use Chill mode

1. Touch on the Home screen.
2. Choose desired mode
3. To chill by time, touch the number to the right of .

   To chill by probe, touch the number to the right of .

   Note: On QC3-100, Probe 1 = left probe receptacle, Probe 2 = middle probe receptacle, Probe 3 = right probe receptacle
4. Enter desired chill time or probe temperature on the number pad, or touch DEF to select factory default.
5. Touch to enter and return to set-up screen.
6. To adjust the chill temperature, touch the number to the right of .
7. Enter desired chill temperature on the number pad, or touch DEF to select factory default.
8. Touch to enter and return to set-up screen.
9. To assign a name to the probe (for HACCP data), touch and enter a name on the keypad.
10. Touch to enter and return to set-up screen.

    Settings can be saved by touching and then . Using the keypad, enter a name for your saved settings. Touch to save.
10. Touch to start the chilling process.

The screen will display the set chill temperature. Touch the icon to display the actual temperature.

Touch at any time to stop the chill cycle.

Touch at any time to go to the previous screen.

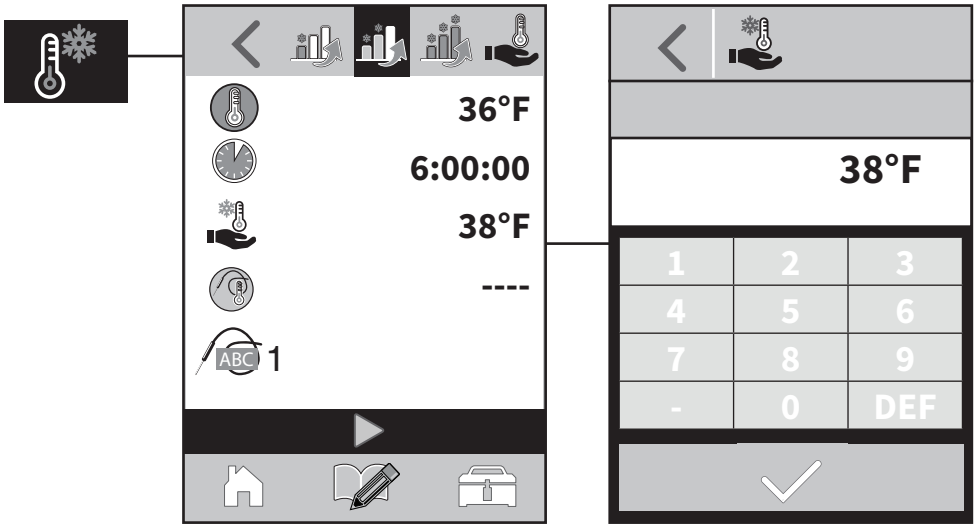

How to use Hold mode

1. Touch on the Home screen.

2. Touch .

3. To hold by time, touch the number to the right of .

   To hold by probe, touch the number to the right of .

   Note: On QC3-100, Probe 1 = left probe receptacle, Probe 2 = middle probe receptacle, Probe 3 = right probe receptacle

4. Enter desired hold time or probe temperature on the number pad, or touch DEF to select factory default.

5. Touch to enter and return to settings screen.

9. Touch to start the chilling process.

The screen will display the set chill temperature. Touch the icon to display the actual temperature.

Touch at any time to stop the chill cycle.

Touch at any time to go to the previous screen.

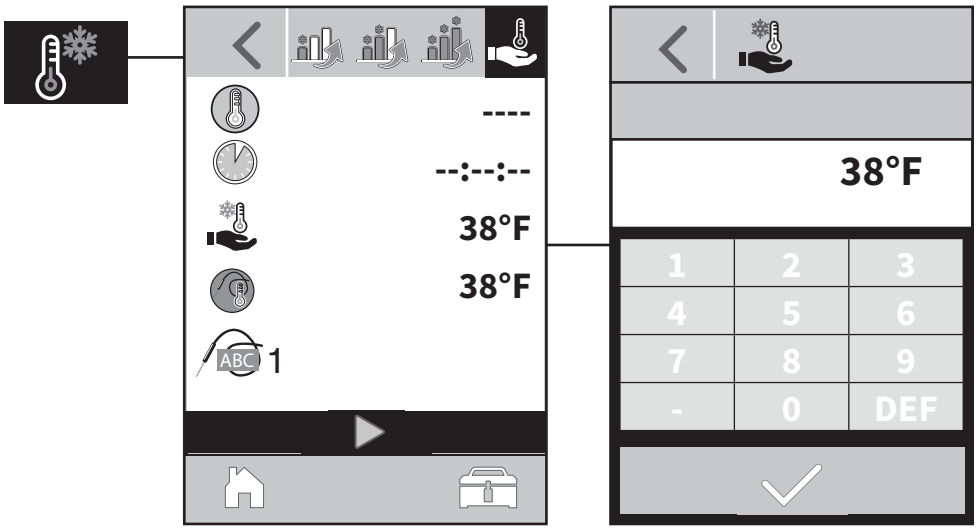

How to upload or download

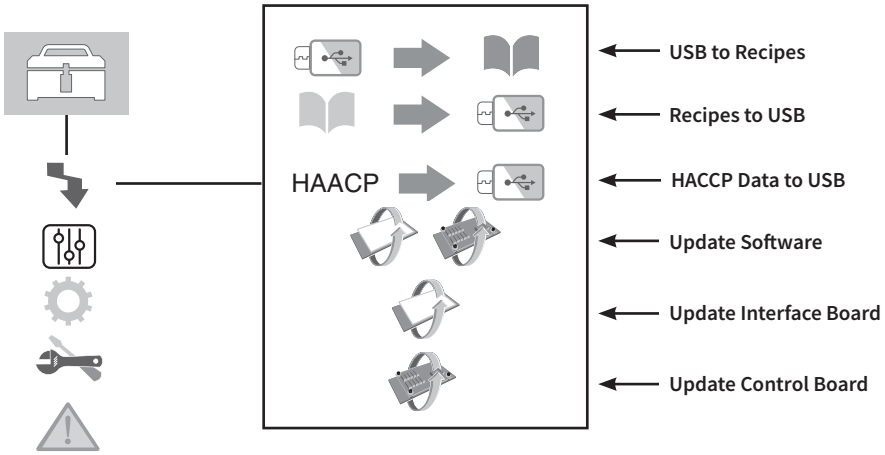

NOTICE: These functions cannot be performed while Quickchiller is chilling.

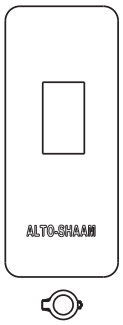

USB Data Port

To transfer HACCP data to USB

1. Insert USB data stick into data port on front of the Quickchiller.
2. Touch and then HAACP . Screen will show the HACCP file that is being transfered and will display any errors that occur. When "Done" is displayed, transfer is complete. Pull the data stick out of the data port.

All data has been transferred to the USB stick and has be erased from the control. A folder called "haccp" is created on the USB data stick containing dated excel file names for each chilling mode or defrost cycle since the last HACCP download. A new file will be created each time a new chill cycle is started.

Sample of Excel HACCP data file

Serial Number:	0A:51:01:01:02:BA										
IB Version:	02.00BV										
CB Version:	102.93										
Start Time:	2016/03/31 - 07:46:51										
Date	Time	Mode	Step	Cavity Set	Time Set	Probe Set	Cavity Actual (°F)	Probe 1 Actual (°F)	Probe 2 Actual (°F)	Probe 3 Actual (°F)	Door
3/31/16	7:46:51	OFF	1	38			66	60	53	46	0
3/31/16	7:47:22	HOLD	1	36		38	66	60	53	46	0
3/31/16	7:48:22	HOLD	1	36		38	66	60	54	46	0
3/31/16	7:49:22	HOLD	1	36		38	66	60	54	46	0
3/31/16	7:50:22	HOLD	1	36		38	66	60	53	46	0
3/31/16	7:51:23	HOLD	1	36		38	66	60	53	46	0
3/31/16	7:52:23	HOLD	1	36		38	66	60	53	46	0
3/31/16	7:53:23	HOLD	1	36		38	66	60	53	46	0
3/31/16	7:54:23	HOLD	1	36		38	65	60	53	46	0
3/31/16	7:55:23	HOLD	1	36		38	65	60	53	46	0

Continued on next page

How to upload or download (continued)

How to upload or download recipes

1. Insert USB data stick into data port on front of the Quickchiller.
2. Touch and then to copy recipe(s) from USB, or to copy recipe(s) to USB.
3. Display will indicate that an upload/download is in process. When complete, pull the data stick out of the data port. Screen will return to Home screen.

How to update software

1. Insert USB data stick into data port on front of the Quickchiller.
2. Touch .
3. Touch to update interface board.

   Touch to update control board.

   Touch to update interface and control board.
4. Display will indicate that an update is in process. When complete, pull the data stick out of the data port.

   Display will return to Home screen.

Operation

Using the set-up menus

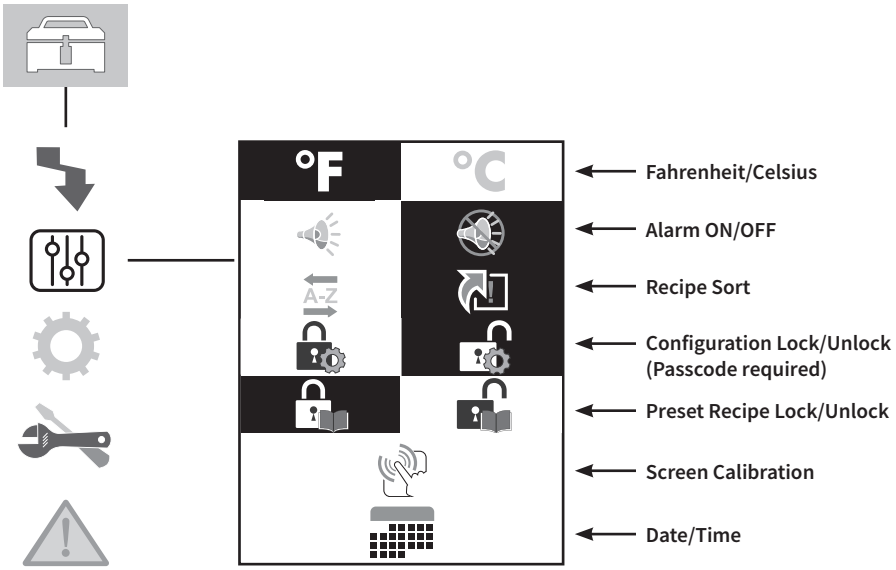

NOTICE: These functions cannot be performed while Quickchiller is chilling.

How to change the temperature scale - Touch °F for Fahrenheit or °C for Celsius.

How to turn the alarm ON/OFF - Touch to turn alarm on or to turn alarm off.

How to turn the Recipe Sort ON/OFF - Touch A-Z to turn sort on or to turn sort off. When recipe sort is ON, new recipes will be added in alphabetical order. When sort is OFF, new recipes will be added to the top of the recipe list.

How to set the pass code to lock the controller configurations - Touch the configuration lock icon . A numberpad will appear on the screen. Enter a four-digit passcode of your choosing. **Important:** Retain this passcode.

How to unlock the controller configurations - Touch the configuration unlock icon . A numberpad will appear on the screen. Enter the passcode.

How to lock/unlock the preset recipes - Touch to lock or to unlock the the ability to change the preset recipes.

How to calibrate the touch screen - Touch and then follow the instructions on the screen.

Note: If you are not able to access the set-up screen, power the Quickchiller off. Hold your finger on the touch screen and power the Quickchiller on. Follow the calibration instructions on the screen.

How to set time/date - Touch and then touch + or − to set desired date (YYYY/MM/DD) and time (HH:MM:SS).

Touch to enter change and return to set-up screen.

Using the Configuration menus

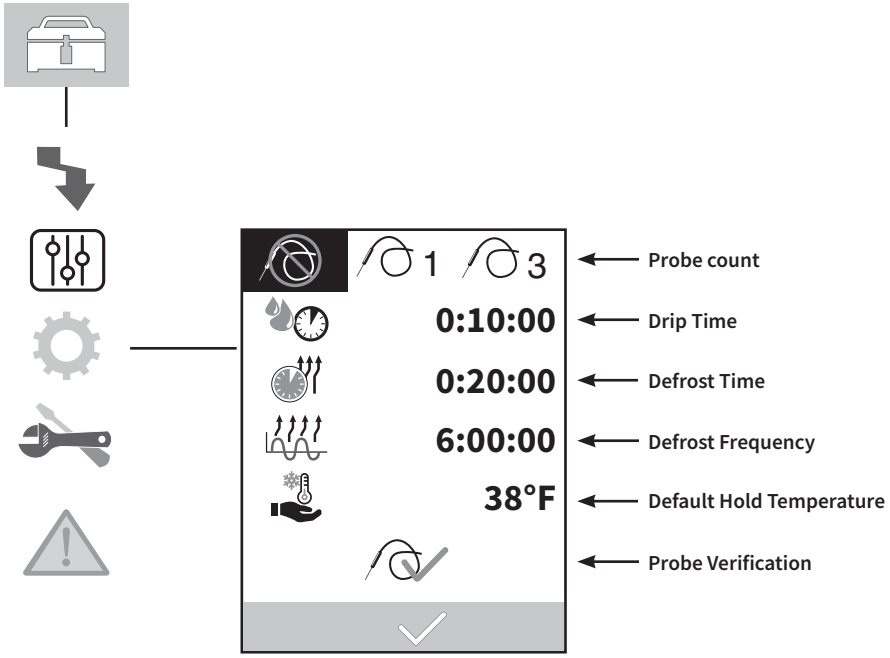

NOTICE: These functions cannot be performed while Quickchiller is chilling.

How to set the probe count - Touch the number of probes being used — zero , one 1 , or three 3.

How to set the drip time - This is the amount of time the drain heater will run after a hot-gas defrost function before automatically switching back to the chilling mode. Factory default setting is 15 minutes. To adjust the drip time, touch the number to the right of enter the desired drip time on the number pad (5-15 minutes) or select factory default DEF.

How to set the defrost time - Touch . This is the amount of time the defrost function will run before automatically switching back to the chilling mode. Factory default setting is 20 minutes. Touch the number to the right of the icon to adjust the duration of defrost within a range of 10-30 minutes. The Quickchiller may not run for the entire length of time set, but will move to drip cycle once appropriate coil temperature has been reached.

How to set the default Hold temperature - Factory default temperature is 38°F. Touch the number to the right of and enter the desired hold temperature between -5°F to +40°F (-21°C to +4°C) on number pad, or select factory default DEF.

How to set the defrost frequency - The defrost frequency is the length of time necessary to accrue before the Fan Timer triggers an automatic defrost cycle. To adjust the length of time, touch the number to the right of and enter the desired time on the number pad, or select factory default DEF.

How to calibrate the probe - Touch and use + or − to adjust the probe offset.

Service Mode

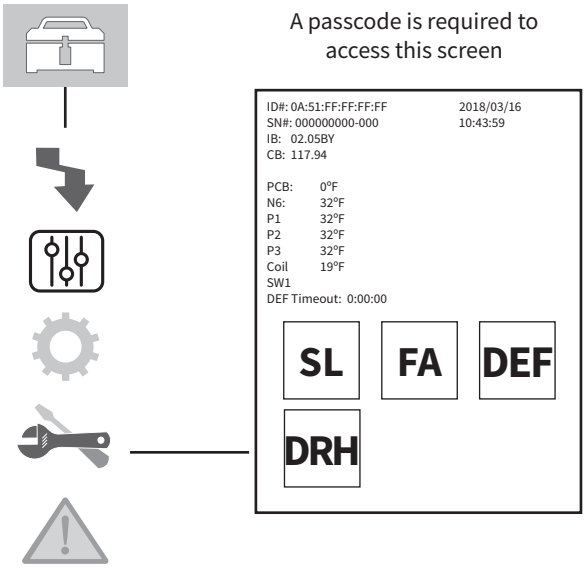

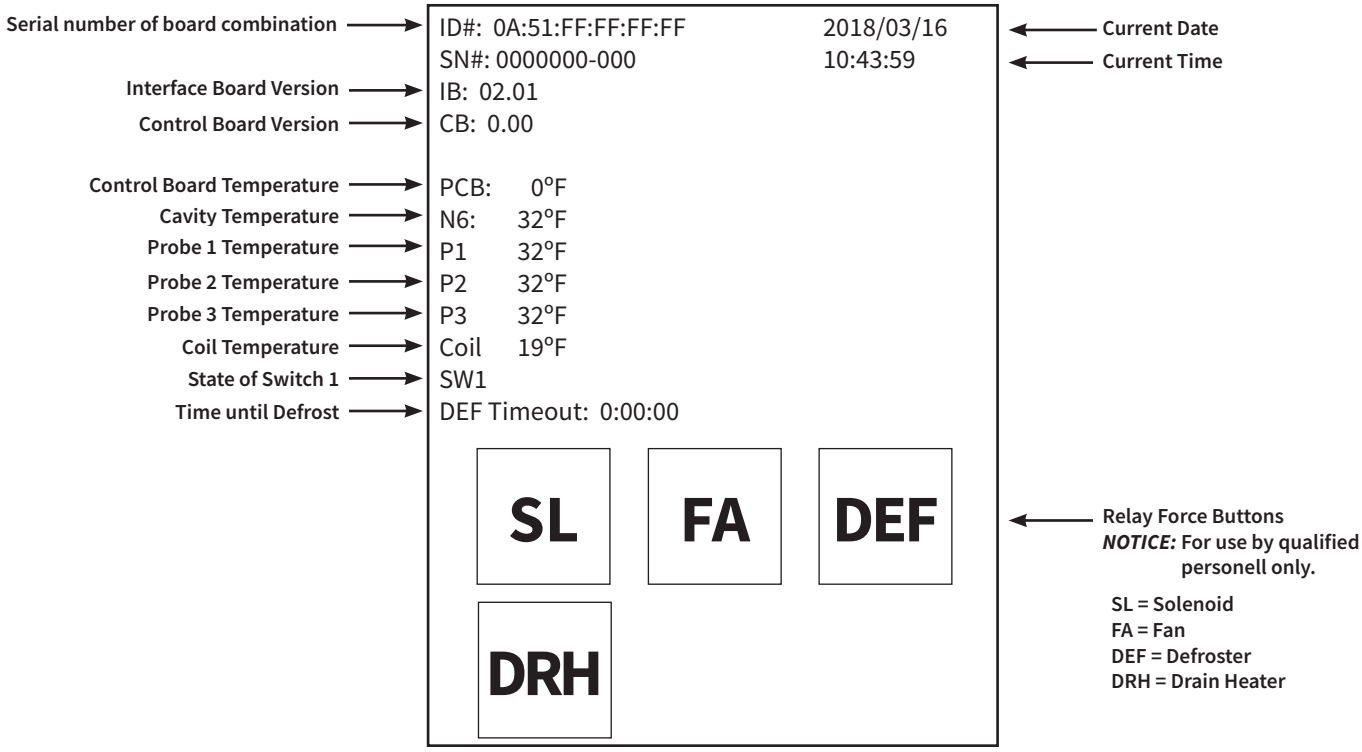

Error Code History

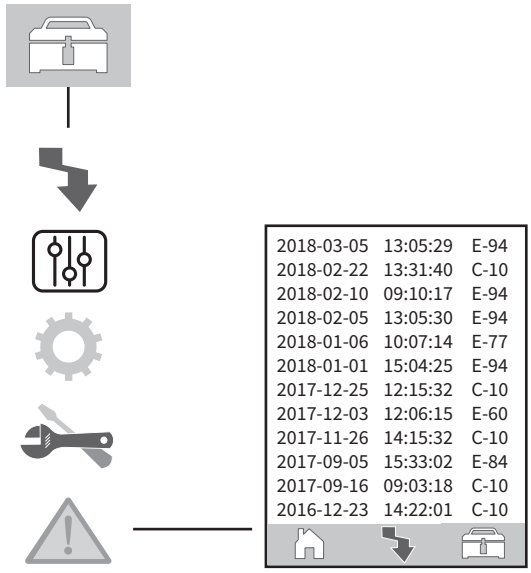

The Error Code History log retains and displays the error codes and the date and time the error occurred. See Troubleshooting page in this manual for error code descriptions and action required.

To download Error Code History to a USB drive

1. Insert USB data stick into data port on front of the Quickchiller.
2. Touch
3. When the download icon turns from dark to light, the download is complete. Pull the USB drive out of the data port.

A uniquely named error log file (i.e. Error_0A_51_81_01_0F-D9.log) is created on the USB drive. The download will include all error codes recorded since the last error code history download. The controller will not retain the error codes once they have been downloaded.

Operation

Warnings

Power Outage

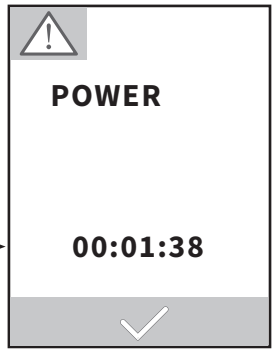

Amount of time chiller has been without power

Error Code

Refer to Troubleshooting section in this manual.

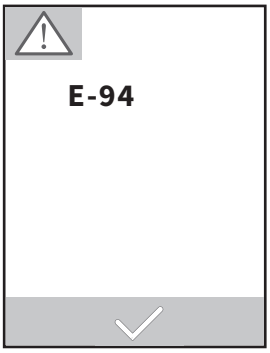

Door Open

Touch to acknowledge warning and return to home screen.

Manual Defrost

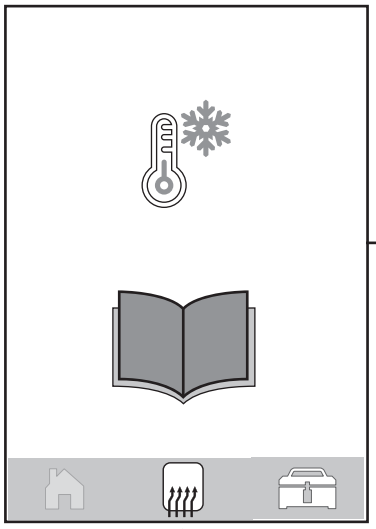

Touch to start 20 minute defrost.

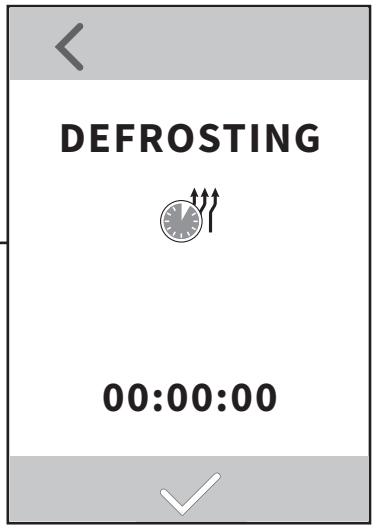

Time remaining in defrost mode.

Touch to return to home screen.

NOTICE: Recipes and settings cannot be accessed while Quickchiller is defrosting.

Unpacking Food Probes

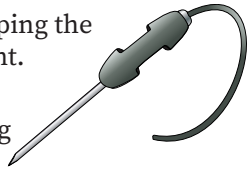

1. Cut and remove the plastic ties keeping the probe cables coiled during shipment.

   When removing the ties, exercise caution to avoid accidentally cutting the black plastic covers on the probe cable wires.
2. Uncoil the probe cables and insert the metal portion of each probe into the bracket mounted on the inside of the cabinet. Proper probe placement is in the following sequence:

   Place the top probe (Product Probe 1) in the top bracket. On equipped models, place the center probe (Product Probe 2) in the middle bracket, and place the bottom probe (Product Probe 3) in the bottom bracket position.
3. Before using the probes, wipe each probe and probe tip with a disposable alcohol pad to clean and sanitize.

Probe Cleaning Procedures

1. Remove all food residue from probes between loads and at the end of each production shift. Remove probes and wash in warm detergent solution. Wipe probe receptacles and probe holding brackets with warm detergent solution and a clean cloth. Remove detergent by wiping with clean rinse water and a cloth. Allow receptacles and holding brackets to air dry.
2. Wipe probes and probe brackets with disposable alcohol pad or sanitizing solution recommended for food contact surfaces.
3. Reattach the probes to the receptacles and place probes into the proper probe bracket.
4. Wipe each probe with a disposable alcohol pad prior to inserting the probe into a new food product.

Time and Temperature Guidelines

To assure quality and safety in chilled processed food handling, it is important to observe the following guidelines.

1. All foods should be covered prior to chill or freeze processing.
2. The temperature of foods should be rapidly reduced from 140°F to 40°F (60°C to 4°C) within a period of 4 hours.
3. Foods can be safely removed from the chiller cabinet at a product temperature of 40°F (4°C) or lower.
4. Chilled foods should be stored under refrigeration designed to hold products at 34° to 38°F (1° to 3°C) for a maximum of 5 days or less. A 5-day shelf life includes the day of production and the day of consumption.
5. All potentially hazardous cooked foods that have been chilled followed by reheating and hot food holding must be reheated to a minimum core temperature of 165°F (74°C) for 15 seconds prior to serving. Refer to local food codes for possible exceptions.
6. Always reference and adhere to local food codes and HACCP guidelines with regard to time and temperature for chilling or frozen food processing.

Allow a minimum of 30 minutes of prechill time before processing.

Operation

Covering Product

To maintain sanitation control when loading the Quickchiller, foods should be above 140°F (60°C) and should be tightly covered. A tight cover is an important part of proper chilling methods and must be used to prevent the possibility of accidental contamination by airborne bacteria.

Stainless steel pan covers may be used. Stainless steel covered pans must include a label indicating pan contents and use-by date. A cover of clear plastic wrap is also acceptable.

When using plastic wrap as a food covering, make certain the wrap comes in direct contact with the surface of the product and extends around and down each side of the pan. This is an important step to ensure proper chilling times. Spacing left between the plastic wrap and the surface of the food creates an insulating air gap resulting in more product heat retention and a slower chilling rate.

Meat roasts and other larger, dense products should be no larger than a weight of 8 to 10 pounds (4 to 5 kg) per item. Because of the density of these products, chilling could take up to 4 hours. Due to longer chilling time required, it is also suggested these items be chilled at the end of the day with the chiller set in the automatic chill/hold mode. This method provides the operator with fully chilled product holding at a refrigerated temperature on the following day.

Prior to chilling, roasts must be wrapped in clear plastic and placed in the chiller. Do not slice roasted meats until the day of service.

Portioned meat products such as pork chops or meat patties should be chilled directly on the sheet pans on which they were cooked. Cover the sheet pans with clear plastic wrap for chilling. After chilling, this type of product can be placed in steam table pans for refrigerated storage.

Portioning and Packaging

1. During portioning and packaging operations, all foods should be maintained at or above 140°F (60°C), or below 40°F (4°C).
2. If cooked foods exceed the processing capacity of the Quickchiller, place hot product in an appropriate back-up hot holding device such as an Alto-Shaam® Halo Heat Combimate holding cabinet which will accommodate a roll-in cart (trolley). Hold hot foods at a temperature above 140°F (60°C).

   If a hot food holding cabinet is not available, place hot foods in short-term refrigerated storage until these products can be loaded into the Quickchiller for the next available processing cycle. Production of cooked foods should not exceed the processing capabilities of the chiller, therefore, do not adopt short-term refrigeration as a routine practice but use only in an emergency situation.
3. Fill containers to a 12 pound (5kg) limit or maximum depth of 2" (51mm) of product. Do not use plastic or Lexan® containers.
4. For faster cooling, place lids and over-wrap materials directly on the surface of foods. As previously indicated, air trapped between the lid and food surface acts as an insulator and will increase chill time.
5. For faster chilling times, place low profile foods such as chicken quarters, fish fillets, or ribs in low depth containers such as 1-1/2" (38mm) deep sheet pans.
6. Large cuts of meat and poultry that weigh a maximum of 8 to 10 pounds (4 to 5 kg) maximum should be individually wrapped with tight fitting film and placed on sheet pans in the chill cabinet.

Quickchiller Pan Capacity

The following Quickchiller Capacity Chart indicates the number of pans that can be accommodated in the appropriate size chiller for the chilling or freezing function. Additional pans can be accommodated only when using the Quickchiller for holding at a refrigerated temperature or at a maintenance temperature for frozen food.

Do not overload the Quickchiller for the processing function.

Chilling Pan Capacity Chart

Chiller model	No. pans	Standard pan sizes	Total weight	Gastronorm pan sizes	Total
QC3-3	3	12" x 20" x 2-1/2" pans	36 lb	530mm x 325mm x 65mm 1/1	16 kg
QC3-20	5 10*	12" x 20" x 2-1/2" pans 18" x 26" x 1" pans	60 lb 60 lb	530mm x 325mm x 65mm 1/1 n/a	27 kg
QC3-40	20 10	12" x 20" x 2-1/2" pans 18" x 26" x 1" pans	160 lb 60 lb	530mm x 325mm x 65mm 1/1 n/a	73 kg
QC3-100	24 48* 20*	12" x 20" x 2-1/2" pans 12" x 10" x 2-1/2" pans 18" x 26" x 1" sheet pans	240 lb 240 lb 120 lb	530mm x 325mm x 65mm 1/1 265mm x 325mm x 65mm 1/2 n/a	109 kg 109 kg

*Additional wire shelves required for maximum capacity †Position pans on every other rail

Product Capacity per Pan

Foods for chill or freeze processing should be portioned into shallow pans to a depth not to exceed 2" (51mm). The individual pan capacity chart below is provided as a general guideline to help determine the number of processing loads required for the total quantity of food to be processed.

Individual Pan Capacities

Steam Table Pan:	12" x 20" x 2-1/2"	12 lb	Gastronorm 1/1	530mm x 325mm x 65mm	5,4 kg
Steam Table Pan:	12" x 10" x 2-1/2"	6 lb	Gastronorm 1/2	265mm x 325mm x 65mm	2,7 kg
Full-Size Sheet Pan:	18" x 26" x 1"	6 lb	n/a	—	—
Half-Size Sheet Pans:	18" x 13" x 1"	3 lb	n/a	—	—

Example: 132 lb per batch ÷ 12 lb per 12" x 20" x 2-1/2" pan = 11 pans
60 kg per batch ÷ 5,4 kg per 325mm x 530mm x 65mm pan = 11 pans

Operation

The following chart of portion sizes and serving capacity per pan is provided as a general reference only.

Portion Sizes and Pan Capacities			
Pan Size ›	**12" x 20" x 2-1/2"**	**325 x 530 x 65mm**	
Food Category	**Serving Size**	**Metric Equivalent Serving Size**	**Servings per Pan**
Breakfast Items:			
Griddle Cakes, Waffles, French Toast (2 TO 3 EACH)	4 oz	113 gm	48
Eggs	2 to 4 oz	57 to 113 gm	96 to 48
Breakfast Meats	2 oz	57 gm	96
Cooked Cereals or Grains	4 oz	113 gm	48
Fruit Compote	4 oz	113 gm	48
Meat, Poultry, Fish, Seafood	4 oz	113 gm	48
Casseroles and Extended Dishes	6 to 8 oz	170 to 227 gm	32 to 24
Vegetables	4 oz	113 gm	48
Starches:			
Potato, Rice, Pasta, Stuffings, Beans	4 oz	113 gm	48
Gravies and Au Jus	2 oz	57 gm	96
Sauces	4 oz	113 gm	48
Protein and Starch-Based Salads	4 to 6 oz	113 to 170 gm	48 to 32
Desserts:			
Pudding, Custard, Mousse, Jello	4 oz	113 gm	48

Protecting Stainless Steel Surfaces

It is important to guard against corrosion in the care of stainless steel surfaces. Harsh, corrosive, or inappropriate chemicals can completely destroy the protective surface layer of stainless steel. Abrasive pads, steel wool, or metal implements will abrade surfaces causing damage to this protective coating and will eventually result in areas of corrosion. Even water, particularly hard water that contains high to moderate concentrations of chloride, will cause oxidation and pitting that result in rust and corrosion. In addition, many acidic foods spilled and left to remain on metal surfaces are contributing factors that will corrode surfaces.

Proper cleaning agents, materials, and methods are vital to maintaining the appearance and life of this appliance. Spilled foods should be removed and the area wiped as soon as possible but at the very least, a minimum of once per day. Always thoroughly rinse surfaces after using a cleaning agent and wipe standing water as quickly as possible after rinsing.

Cleaning Agents

Use non-abrasive cleaning products designed for use on stainless steel surfaces. Cleaning agents must be chloride-free compounds and must not contain quaternary salts. Never use hydrochloric acid (muriatic acid) on stainless steel surfaces. Failure to observe this precaution will void the warranty. Always use the proper cleaning agent at the manufacturer's recommended strength. Contact your local cleaning supplier for product recommendations.

Cleaning Materials

Cleaning can usually be accomplished with the proper cleaning agent and a soft, clean cloth. When more aggressive methods are needed, use a non-abrasive scouring pad on difficult areas and make certain to scrub with the visible grain of surface metal to avoid surface scratches. Never use wire brushes, metal scouring pads, or scrapers to remove food residue. Failure to observe this precaution will void the warranty.

NOTICE

To protect stainless steel surfaces, completely avoid the use of abrasive cleaning compounds, chloride based cleaners, or cleaners containing quaternary salts. **Never** use hydrochloric acid (muriatic acid) on stainless steel. **Never** use wire brushes, metal scouring pads or scrapers.

⚠ WARNING

To prevent **serious personal injury**, **death**, or **property damage**:

The appliance must be cleaned thoroughly to avoid deposits of grease and or food residue inside the appliance that may catch fire. If fat deposits and/or food waste inside the appliance ignite, shut down the appliance immediately and keep the appliance door closed to extinguish the fire. If further extinguishing is required, disconnect the appliance from the main power and call the fire department. Failure to clean the appliance properly voids the warranty and relieves Alto-Shaam of all liability.

Cleaning and Preventative Maintenance

⚠ WARNING

To prevent serious injury, death, or property damage, **always** disconnect the appliance from the power source before cleaning or servicing.

How to clean the chiller interior

Remove the optional roll-in cart (trolley) from cart equipped models. Open the Quickchiller door to warm the interior of the cabinet.

1. Remove any loose food debris with a cleaning cloth or small hand broom.
2. Use a mild, non-abrasive detergent and warm water. Wipe-down the interior of the cabinet, removing all food residue. This includes the ceiling, floor, walls and fan panel.

   Wipe-down the interior door panel and clean the vinyl gaskets. Make certain to clean under the gaskets to remove any mildew accumulation or food residue.
3. Rinse all interior surfaces including the cabinet door and gasket with clean water and a cloth. Remove all rinse water.
4. Wipe interior surfaces with a clean cloth and sanitizing solution for use on metal and vinyl food contact surfaces. This is an important step to control the build-up of unwanted mildew and mold in the refrigeration system.
5. Allow interior to air dry with door open.

How to clean the chiller exterior

1. Wipe all exterior surfaces including the control panel, door frame, latches, and hinges with a damp cloth containing a mild, non-abrasive, non-chloride detergent solution.
2. Rinse detergent solution with a cloth and warm water. Allow exterior to air dry.
3. Polish with any standard stainless steel polish designed for use on food service equipment. When cleaning the exterior of the cabinet, always wipe with the grain of the stainless steel to avoid scratching or marring the finish. Avoid an accumulation of oil based polish or cleaner collecting along the edges of the keyboard overlay on the control box. Oil build-up around the control overlay could eventually loosen the panel.

Do not use abrasive cleaning compounds or implements.

⚠ WARNING

To prevent serious personal injury, death, or property damage:

Do not steam clean, hose down or flood the interior or exterior with water or liquid solution of any kind. **Do not** use water jet to clean. Failure to observe this precaution will void the warranty.

How to clean the probes

1. Remove all food soil from probes between loads and at the end of each production shift. Wipe entire probe, cable assembly, and probe holding door bracket with warm detergent solution and a clean cloth.
2. Remove detergent by wiping each probe, cable, and bracket with clean rinse water and a cloth.
3. Wipe probes and probe brackets with disposable alcohol pad or sanitizing solution recommended for food contact surfaces
4. Allow probe and cable to air dry in probe holding door bracket.
5. Wipe the probe with a disposable alcohol pad prior to inserting into a new food product.

How to clean the roll-in trolley

1. Take food trolley to a cart wash area. Trolleys may be cleaned using any mild cleaning detergent and warm water.
2. Hand wipe all framing, slides, drip pan, and base. Thoroughly clean debris from the casters. A spray hose can be used for easier cart cleaning.
3. Remove detergent solution with warm water.
4. Wipe or spray with a sanitizing solution designed for use on metal and vinyl food contact surfaces.
5. Allow trolley to air dry.

How to clean the condenser coils

Keep the condenser coils free of dust and debris build-up to insure proper air circulation and cooling of the refrigeration system.

1. Turn power supply to the cabinet OFF.
2. Using a vacuum or small hand broom, brush the condenser coils in a vertical motion to remove any accumulated dust or debris.
3. Turn breaker switches ON and replace air grill.

Troubleshooting

Always check the circuit breaker is turned "ON" and your Quickchiller is receiving power **before** calling an authorized Alto-Shaam service agent.

NOTICE

This section is provided for the assistance of qualified and trained service technicians only and is not intended for use by untrained or unauthorized service personnel. Do not attempt to repair or service the chiller beyond this point. Contact Alto-Shaam for the nearest authorized service agent. Repairs made by any other service agents without prior authorization by Alto-Shaam will void the warranty.

Error code	Action Required
C-10 – Coil sensor shorted	This error message indicates a problem with the display identified coil sensor. The chiller will not operate in any operational mode. Contact service.
C-11 – Coil sensor open	This error message indicates a problem with the display identified coil sensor. The Quickchiller will not operate in any operational mode. Contact service.
E-SD - Micro-SD card not plugged in	Reseat SD card. Contact factory if problem persists.
E-10 – Cavity Sensor Shorted	This error message indicates a problem with the interior cavity sensor. The Quickchiller will not operate in any operational mode. Contact service.
E-11 – Cavity Sensor Open	This error message indicates a problem with the interior cavity sensor. The Quickchiller will not operate in any operational mode. Contact service.
E-41 - Touch error	Self-correcting. If error persists, contact Service.
E-43 - Touch controller not detected	Replace control.
E-44 - Touch error	Self-correcting. If error persists, contact Service.
E-53 – Control hardware error	Fatal error. Quickchiller will not operate. Contact Service.
E-54 – Control hardware error	Fatal error. Quickchiller will not operate. Contact Service.
E-60 – Real Time Clock checksum fail/invalid time	Date/Time reset to default value. Reset date/time to current.
E-61 – Real Time Clock not responding/not detected/not present	Control failure. Replace control.
E-64 – Real Time Clock not ticking	Control failure. Replace control.
E-66 – Control processor reset	Processor reset on control board. Contact Service.
E-70 – Personality changed	Control Board personality changed during operation. Contact Service.
E-77 – Defrost overdue	Quickchiller is more than 1 hour overdue for defrost. Defrost chiller. If error persists contact Service.
E-80 – EEPROM error	This error message indicates the control memory is not correctly reading user-set values. The Quickchiller will remain operational but the user defined settings will be reloaded to the default values. The control will revert to factory default settings and will require operator modification each time the Quickchiller is used. Contact Service.
E-83 – EEPROM not responding	EEPROM not responding. Contact Service.
E-84 – EEPROM User Options Error	User options error. Turn the chiller on and off to reset. If problem persists contact Service.
E-93* - Moding Error	If error persists, and is not due to a software mismatch, contact Service.
E-94 – Communication failure	Interface board and control board not communicating. The Quickchiller will not operate in any mode. Contact Service.
P-10 – Probe 1 shorted	This error message indicates a problem with the Probe 1. The Quickchiller will operate normally in the Time mode but will not operate in the Probe mode. Contact Service.
P-20 – Probe 2 shorted	This error message indicates a problem with the Probe 2. The Quickchiller will operate normally in the Time mode but will not operate in the Probe mode. Call Service.
P-30 – Probe 3 shorted	This error message indicates a problem with the Probe 3. The Quickchiller will operate normally in the Time mode but will not operate in the Probe mode. Call Service.

* E-93 will trigger at start-up if CB software is 0.93 or older with IB software 2.05 or newer.

QC3-3 Bottom

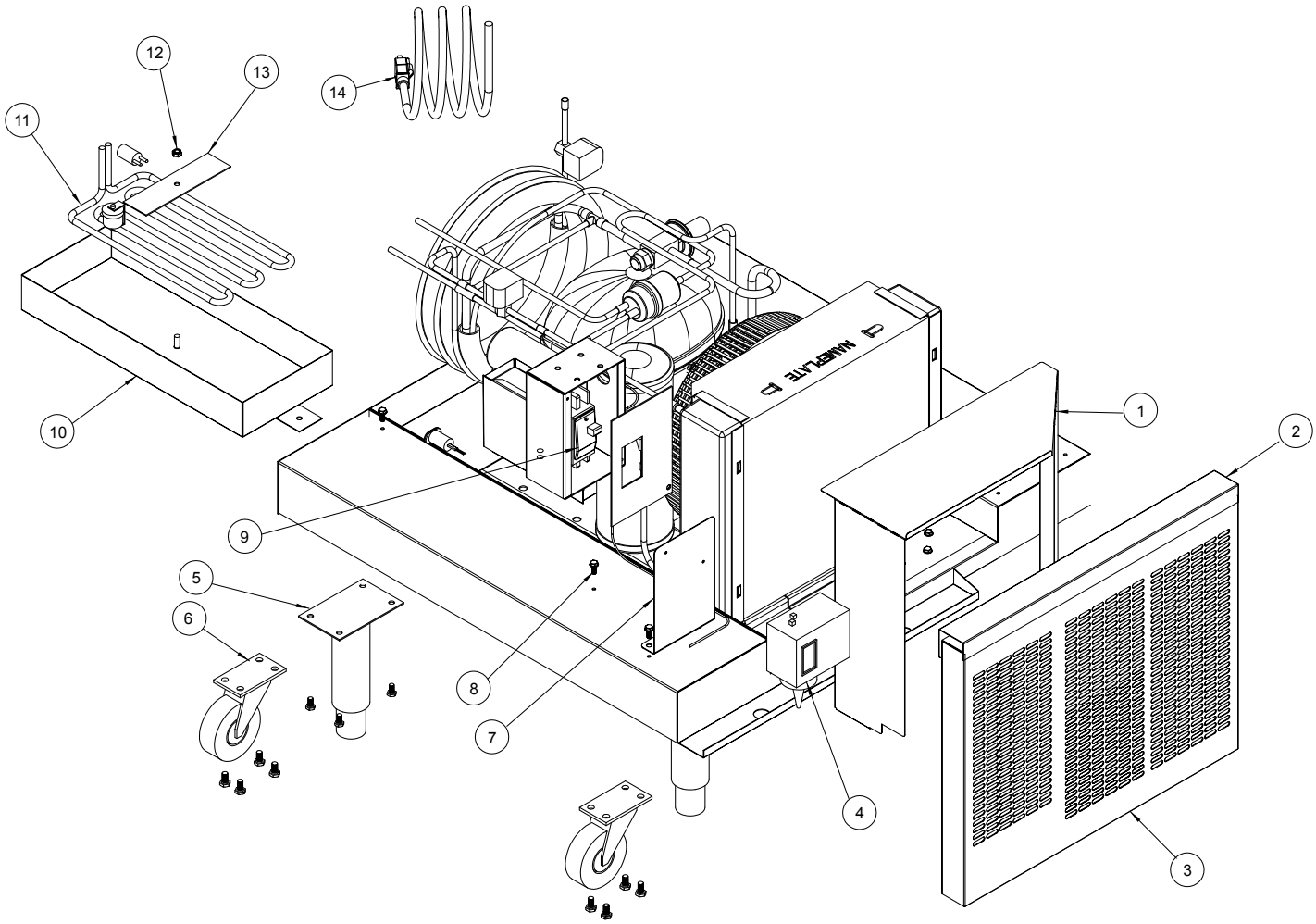

Item	Part	Description	Qty.
1	RE-29821	Condensing Unit Duct	1
2	PE-29819	Top Louver Channel	1
3	PE-29830	Compressor Louver	1
4	SW-29823	Pressure Switch	1
5	5014889	Leg Assembly (Set of 4)	1
	LG-29904	Leg, 6"	4
	SC-29824	Leg Bolt, 1/4-20 x 3.5" Shoulder Bolt Hex Head	16
6	5014890	Caster Assembly	1
	CS-29822	3" Caster Non-Locking, Option	4
	SC-29824	Bolt, 1/4" .20" x 5" Shoulder	16
	WS-23725	Washer, 5/16"ID, 3/4" OD, .042 thick	16
7	BT-29820	Electrical Mounting Bracket	1
8	SC-29829	Bolt, 10-24x1/2 H/W/H 410 SS F08ZS Hex Head	12
9	FU-29901	Breaker, 2 Pole 20 Amp, QOU220 Universal	1
10	PN-29825	Condensate Evaporator Pan	1
11	EL-29828	Element Condensate Pan, 115V 200W Evap. 000274 N	1
12	NU-29827	Nut, 10-24 Stainless Nylock	1
13	BT-29826	Tie Down Bracket for Elect Condensate Evaporator Heater	1
14	CD-29831	Cord with Plug, 20Amp 125V 5-20P, 9' Long	1

QC3-3 Box view

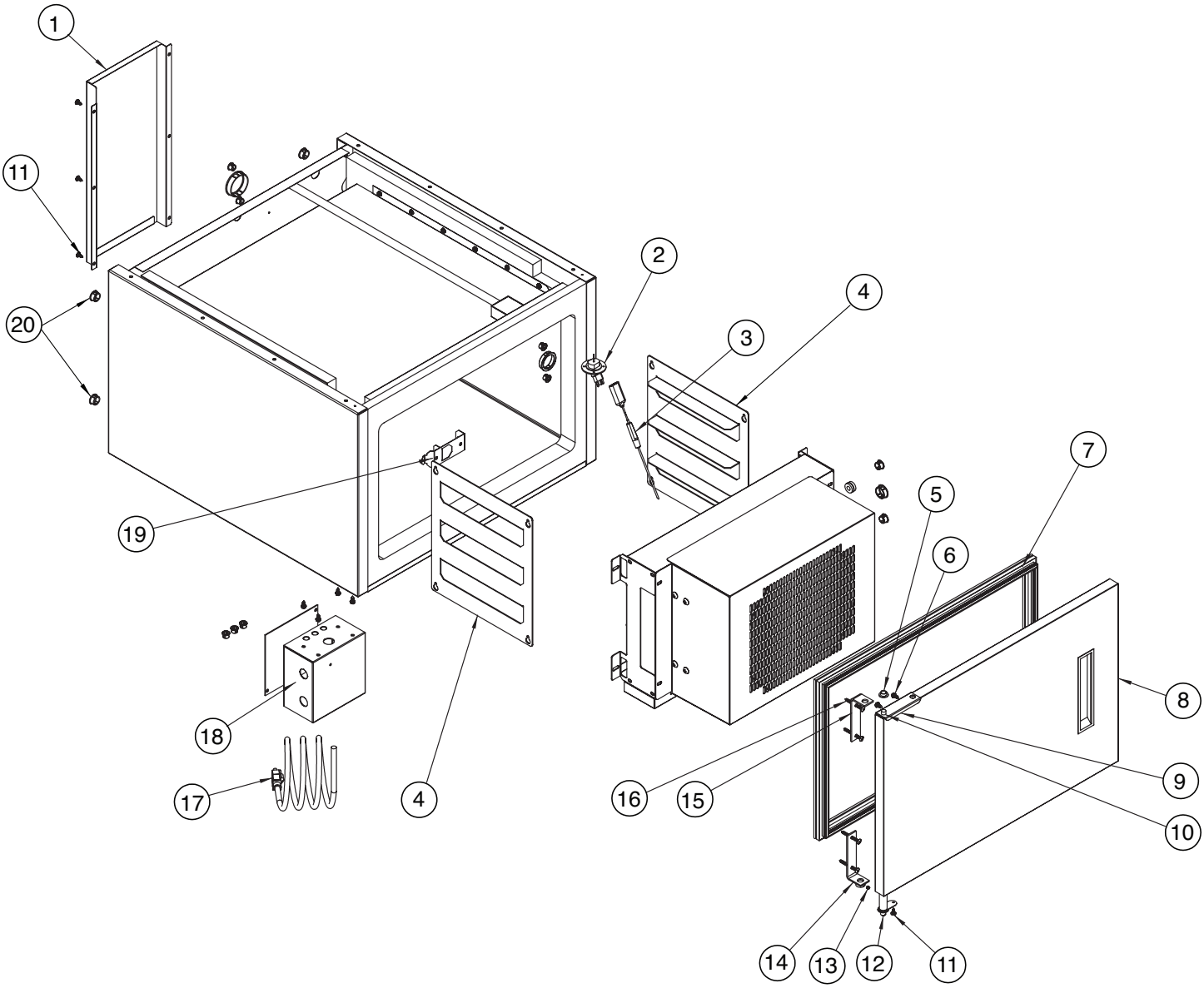

Item	Part	Description	Qty.
1	BT-29841	Holding Bracket Ref Line	1
2	PR-35771	Probe Receptacle Assembly	1
3	PR-36201	Probe, Quick Connect	1
4	SR-29832	Stainless Steel Side Rack	2
5	BU-29937	Bushing, Nylon Hinge 118	1
6	SC-29839	Screw, 10x1/2" Slot	1
7	GS-29838	Gasket, 15.59 x 24.25 Push In Press In	1
8	DR-29833	Door, Hinged Left	1
9	HG-35736	Hinge, Top Door, Left Hand Channel	1
10	PI-35930	Hinge Pin	1
11	SC-29835	Screw, 10x1/2" T/H/P 410 S/S M4XG	1

Item	Part	Description	Qty.
12	HG-29834	Hinge, Spring Load Assembly	1
13	SC-29837	Screw, 1/4-20 x 5/8" Socket Set 18-8 SS	1
14	HG-29836	Hinge, Strap w/Collar 38mm L-Shaped	1
15	HG-29960	Unit Hinge Bracket	1
16	SC-29910	Screw, 10x2" THP TYPE A S M62G 410SS	4
17	RE-29844	Cord, 2 Prong Male, for Fan	1
18	BX-29843	Electrical Box	1
19	HL-29840	Food Probe Holder	1
20	PG-35098	Plug, 3/4" Grommet	5
21*	ST-35099	Stud, Side Rack Mounting (not shown)	4

*not shown

QC3-3 Coil view

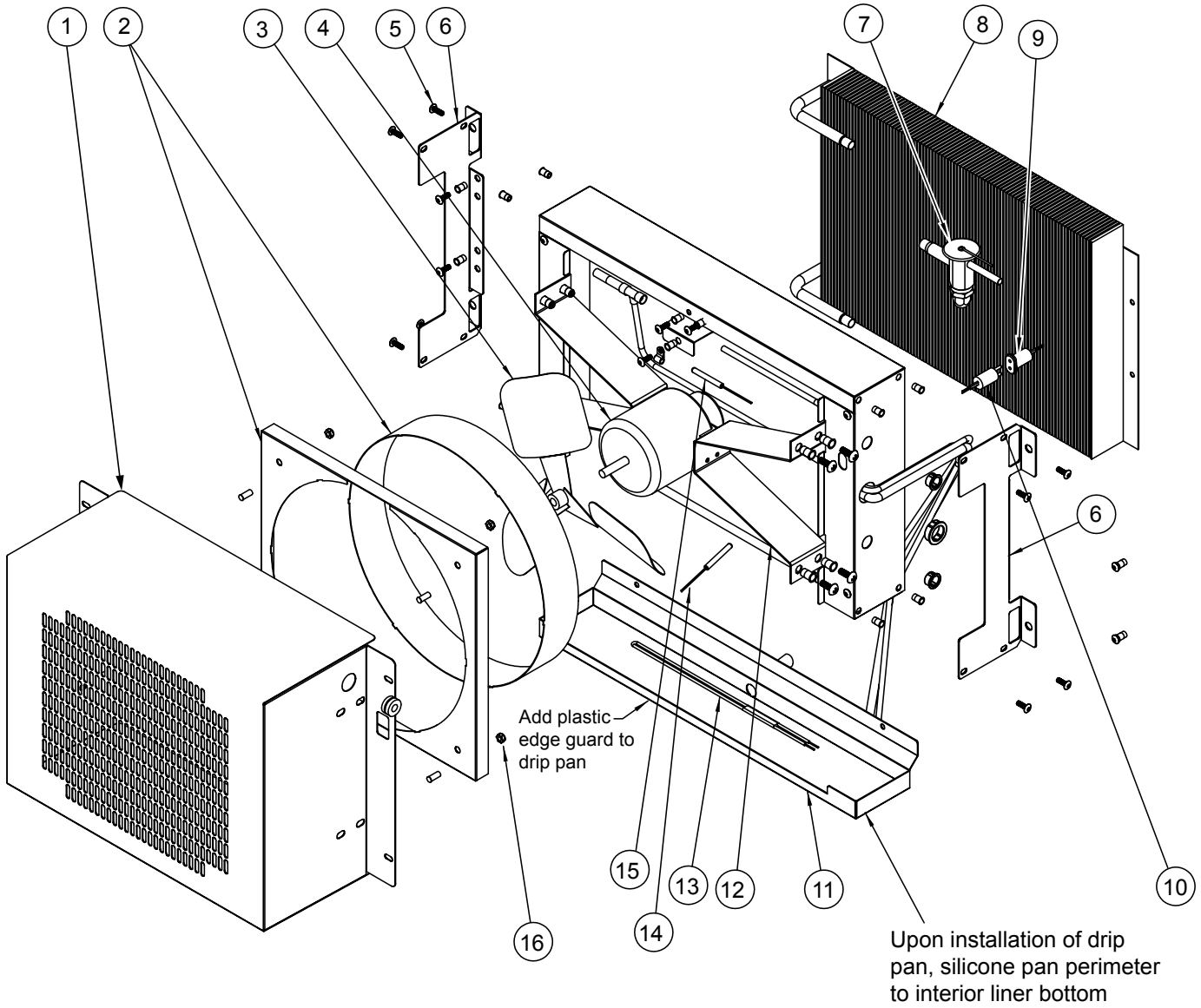

Item	Part	Description	Qty.
1	GD-29848	Fan Guard	1
2	GD-29850	Fan Shroud Assembly	1
3	FA-29854	Blade, 12" (305mm) Evaporator Fan	1
4	FA-29853	Motor, Fan ESP-OL75EM14	1
5	SC-29855	Bolt, 10-24x5 Phillip Truss	19
6	BT-29847	Evaporator Coil Mounting Bracket	2
7	VA-29852	Valve, 1/4 Ton R404 L-T MOP	1
8	RE-29846	Coil Assembly, 12x17-1/4 3EX-0802C	1

Item	Part	Description	Qty.
9	CD-29831	Cord, 2 Prong 24" (610mm) Female	1
10	CD-29858	Cord, 2 Prong 24" (610mm) Male	1
11	PN-29851	Drain Pan with Tubing, Evaporator BC-3	1
12	BT-29849	Fan Mounting Bracket	2
13	WI-35157	Wire, 11" (279mm) Loop, Drain Heater	1
14	PR-37483	Coil Sensor/, Defrost/Sensor	1
15	SN-33541	Sensor, 1-3/4" (44mm) Long	1
16	NU-29827	Nut, 10-24 Stainless Nylock	4

QC3-3 Compressor view

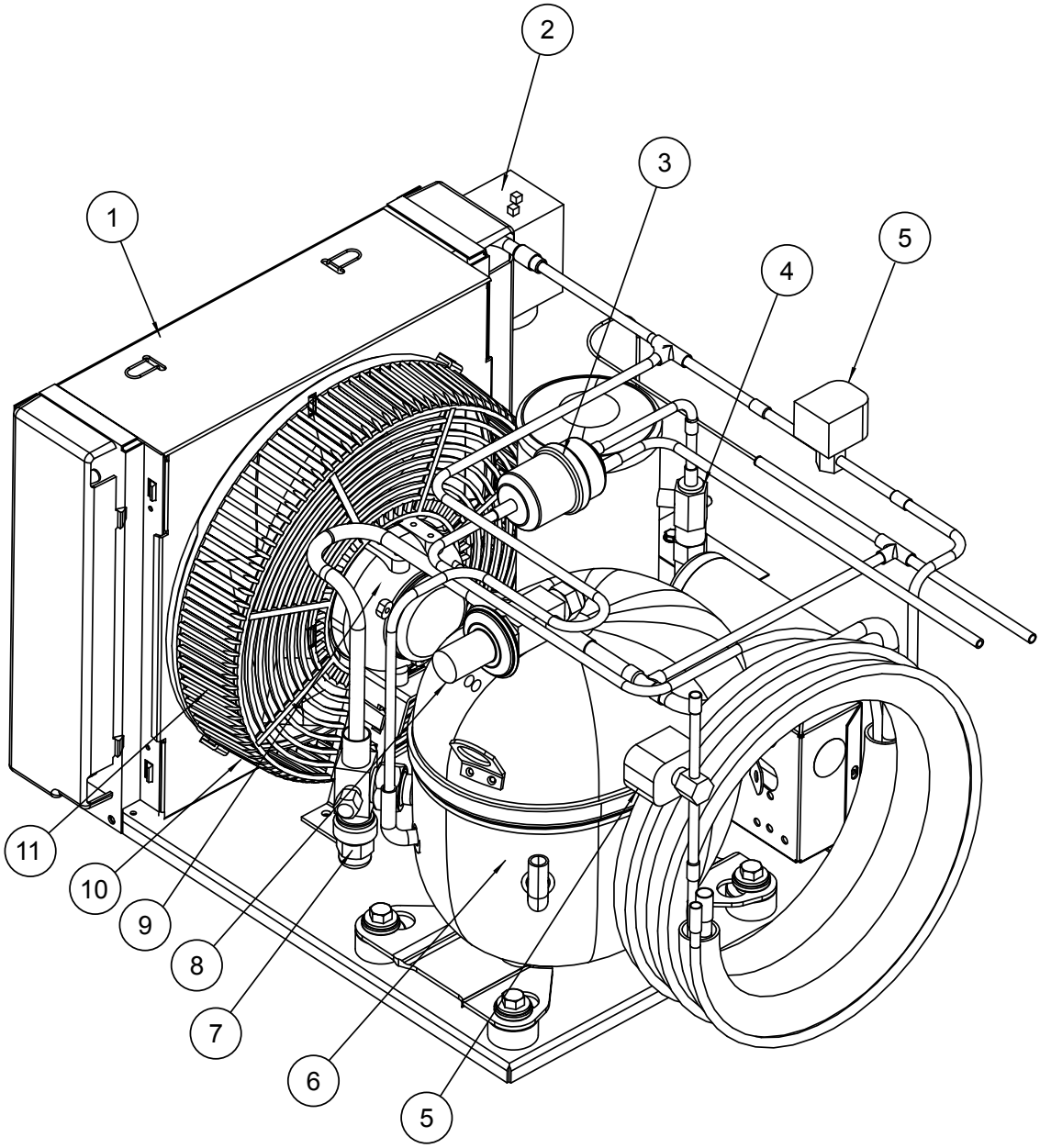

Item	Part	Description	Qty.
1	RE-29861	Condensing Assembly, 1/2 MED R404A 120V	1
2	SW-29823	Pressure Switch	1
3	FI-29862	Dryer, 1/4" Filter with 2nd 1/4"	1
4	**	Service Valve King	1
5	VA-29863	Solenoid Valve & 120V Coil	2
6	**	Compressor	1
7	**	Service Valve Suction	1
8	VA-29864	Valve, Sporlan CRO-4-0/75 Crankcase Pressure Reg.	1
9	MO-29865	Motor, Fan Condenser Unit	1
10	FA-29866	Fan Blade	1
11	**	Fan Guard	1
		1/4" & 3/8" Diameter Copper Tubing is used	

**not available from factory

Service

QC3-3 Control Box

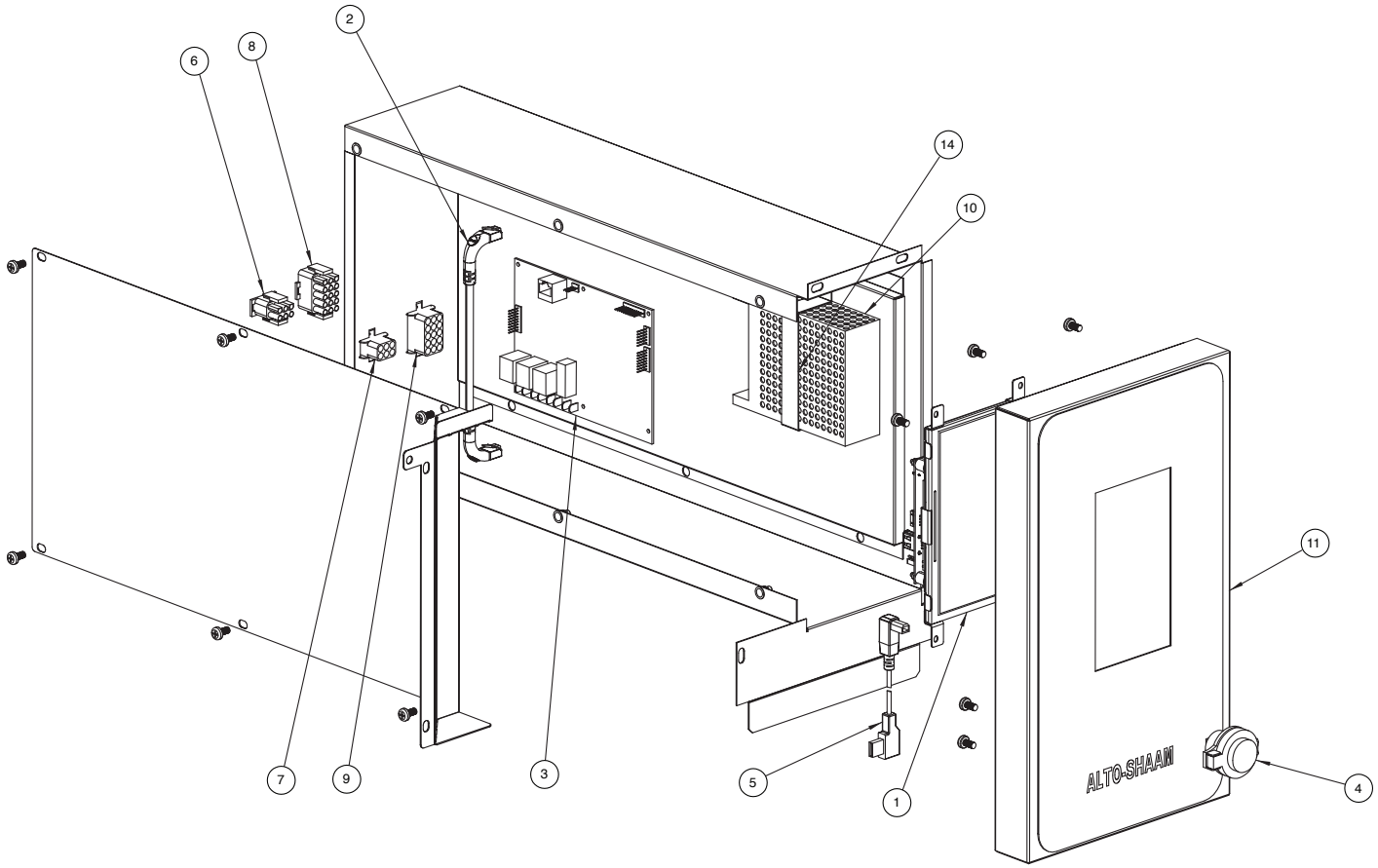

Item	Part	Description	Qty.
1	5021440	LCD Display Assembly, 7"	1
2	CB-38675	Ethernet Cable	1
3	CC-39540	Control Board	1
4	CB-35746	Connector, USB, Panel Mount	1
5	CB-36571	USB Communication Cable w/ plug	1
6	CR-37491	Connector, Male, Housing	1
7	CR-37493	Connector, Female, Housing	1
8	CR-37322	Connector, Male, Housing	1
9	CR-37321	Connector, Female, Housing	1
10	BA-29927	Power Supply, 115V to 12VDC	1
11	PE-37597	Control Panel Overlay	1

QC3-20 Box view

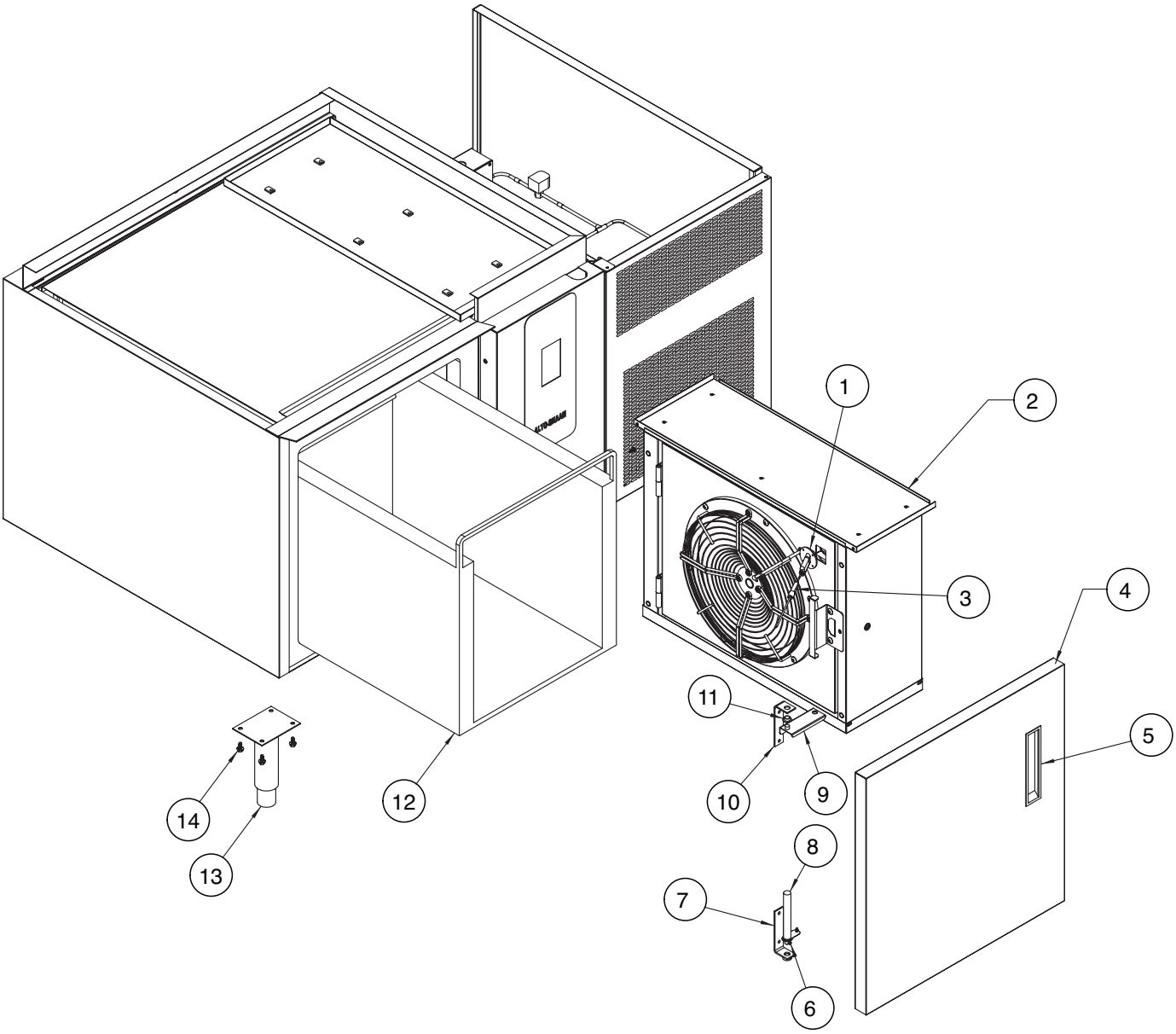

Item	Part	Description	Qty.
1	PR-35771	Probe Receptacle Assembly	1
2	RE-29905	Coil Assembly	1
3	PR-36201	Probe, Product	1
4	DR-29957	Door Assembly with Handle, Hinged Left	1
	Contact factory	Door Assembly with Handle, Hinged Right	
5	HD-29958	Door Handle, Recessed	1
6	SC-29837	Bolt, Black Set Screw	1
7	HG-29836	Hinge, Strap w/ Collar 41mm, L-shaped	1
8	HG-29834	Hinge, Self-Closing	1

Item	Part	Description	Qty.
9	HG-29959	Hinge, Top Door, Left Hand Channel	1
10	HG-29960	Hinge, Strap w/o Collar 38mm, L-shaped	1
11	BU-29937	Bushing, Nylon Hinge	1
12	SR-35827	Slide 9-Pan Rack, Standard	1
	SR-29969	Stainless Steel Side Rack, Optional	2
13	5014889	Leg Assembly (Set of 4)	1
	LG-29904	Leg, 6"	4
14	SC-29824	Leg Bolt, 1/4-20 x 3.5" Shoulder Bolt Hex	16

QC3-20 Optional Side Rack (holds GN 1/1 Hotel pans)

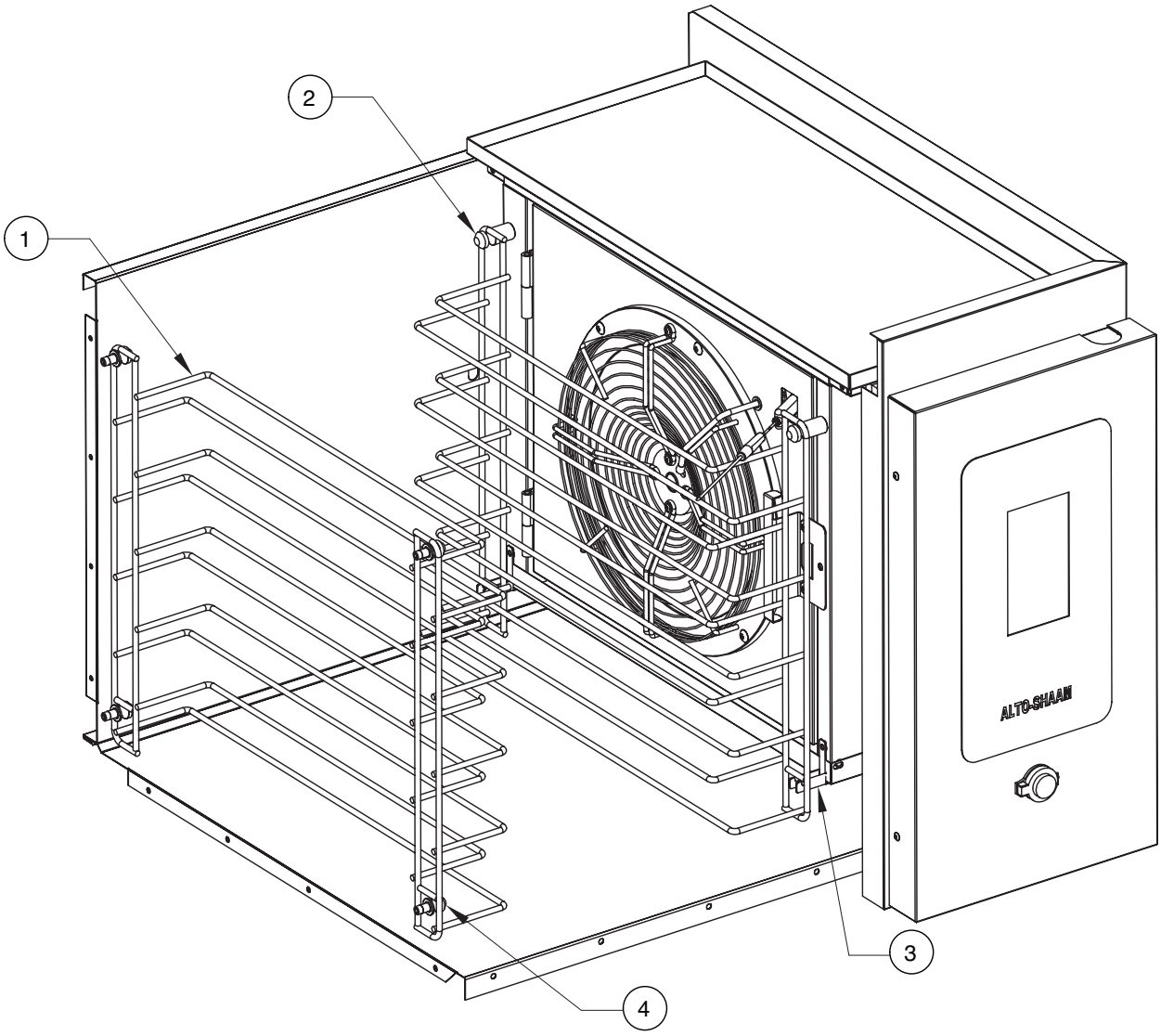

Item	Part	Description	Qty.
1	SR-29969	Side racks	2
2	PI-29939	Pins, long	2
3	BT-29942	Bracket	2
4	PI-35828	Pins, short	4

QC3-20 Coil view

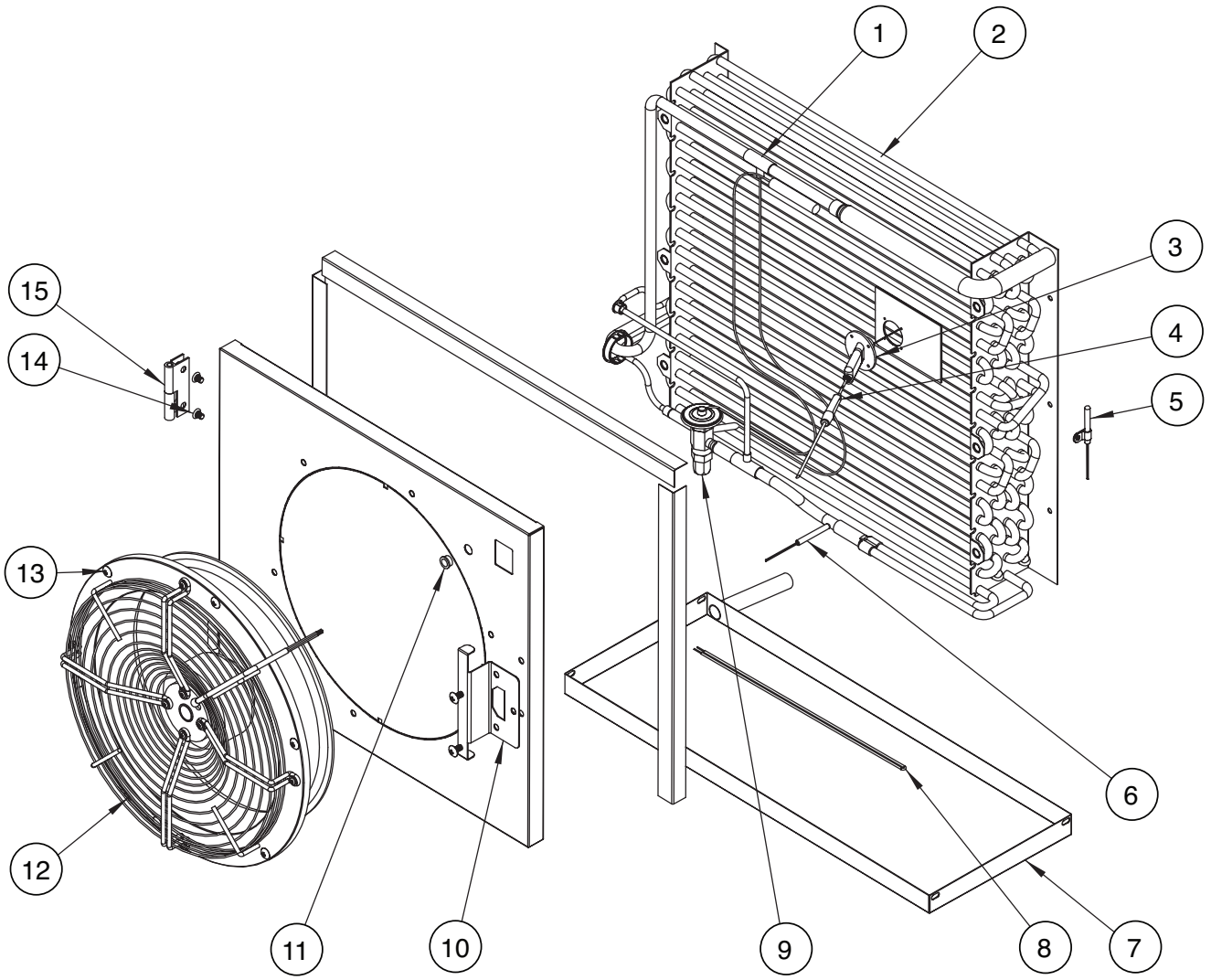

Item	Part	Description	Qty.
1	TE-35100	Tee, Copper, 1/2 x 1/2 x 1/4	2
2	RE-29905	Coil	1
3	PR-35771	Probe Receptacle Assembly	1
4	PR-36201	Probe, Product	1
5	SN-33541	Sensor, Air	1
6	PR-37483	Coil Sensor/, Defrost/Sensor	1
7	PN-29943	Drip Pan	1
8	WI-35157	Wire, 11" (279mm) Loop Drain Heater	1
9	VA-29900	Expansion Valve	1
10	LT-29940	Latch, Plate for Fan Door	1
11	BU-29937	Bushing, Nylon	1
12	FA-29945	Fan	1
13	SC-29935	Bolt, 1/4-20	19
14	SC-29936	Bolt, 1/4-20 x 3/8"	8
15	HG-29938	Hinge Assembly, 2" x 3" Lift Off Left	2

Service

QC3-20 Compressor view

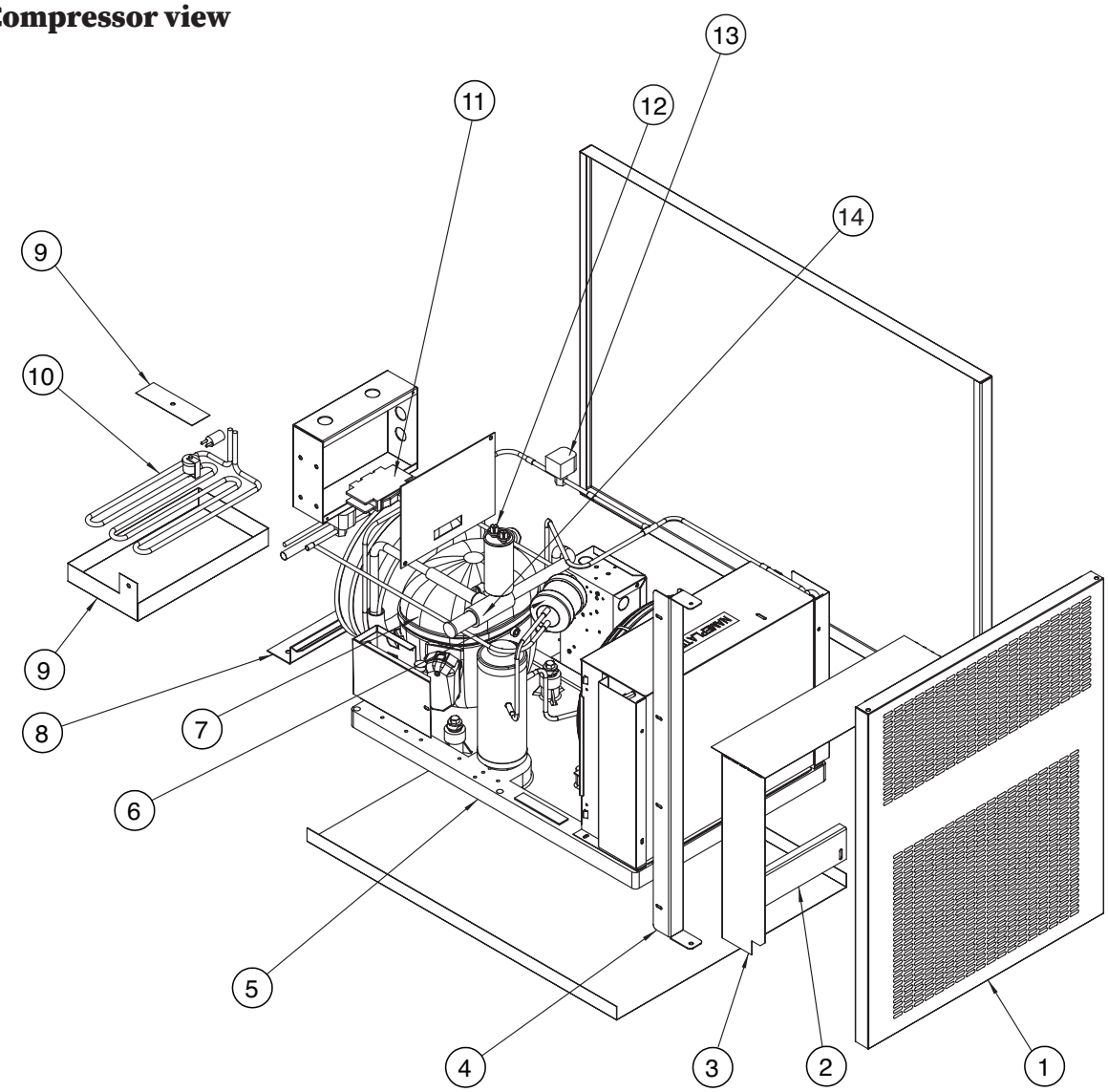

Item	Part	Description	Qty.
1	PE-29968	Compressor Louver	1
2	BT-29950	Bracket, Front Compressor Hold Down	1
3	PN-29949	Housing	1
4	BT-29967	Louver Mounting Bracket	1
5	RE-29948	Condensing Unit, 3/4 HP LT R404A 120V	1
6	FI-29954	Filter Dryer	1
7	**	Compressor	1
8	BT-29951	Bracket, Back Compressor Hold Down	1
9	RE-29966	Condensate Evaporator Pan, includes Hold Down Bracket	1
10	EL-29828	Evaporator Element, 115V 200W	1
11	FU-29965	Breaker, 1 Pole 20 Amp	1
12	CU-29964	Capacitor, 14MFD, 440VAC	1
13	VA-29893	Solenoid Valve	1
14	VA-29900	Crankcase Pressure Releif Valve	1
15*	MO-29955	Motor, 3/4 HP Compressor Fan Motor	1
16*	FA-29956	Fan Blade for Compressor Fan Motor	1
		1/4" & 3/8" Diameter Copper Tubing is used	

*not shown **not available from factory

QC3-20 Control Panel

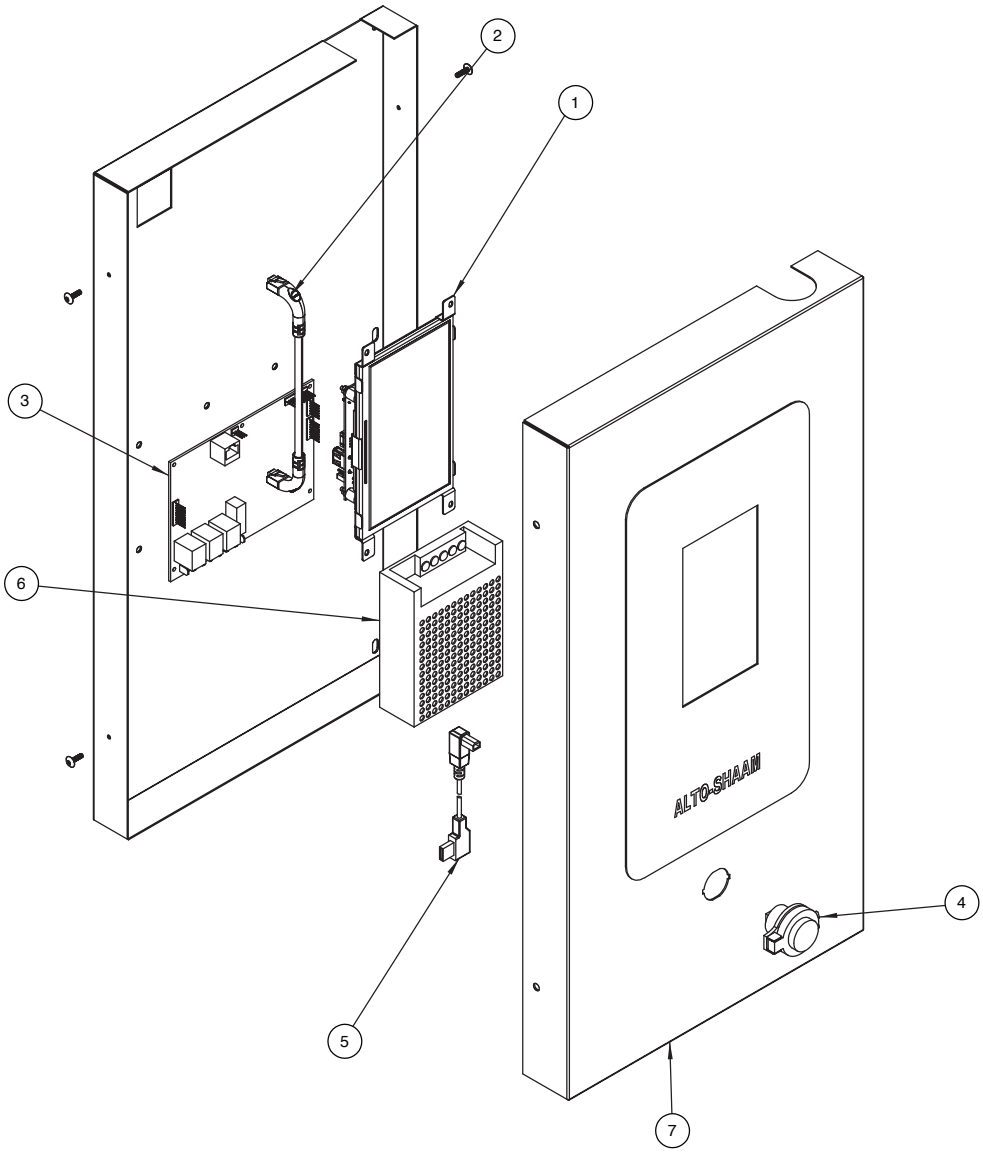

Item	Part	Description	Qty.
1	5021440	LCD Display Assembly, 7"	1
2	CB-38675	Ethernet Cable	1
3	CC-39540	Control Board and Firmware	1
4	CB-35746	Connector, USB, Panel Mount	1
5	CB-36571	USB Communication Cable	1
6	BA-29927	Board, Power Supply	1
7	PE-37598	Control Panel/Panel Overlay Assembly, Left-hand	1
	PE-37599	Control Panel/Panel Overlay Assembly, Right-hand	1
8	5018422	Beeper Assembly (not shown)	1
9	SW-36882	Door Switch	1

Service

QC3-40 Compressor

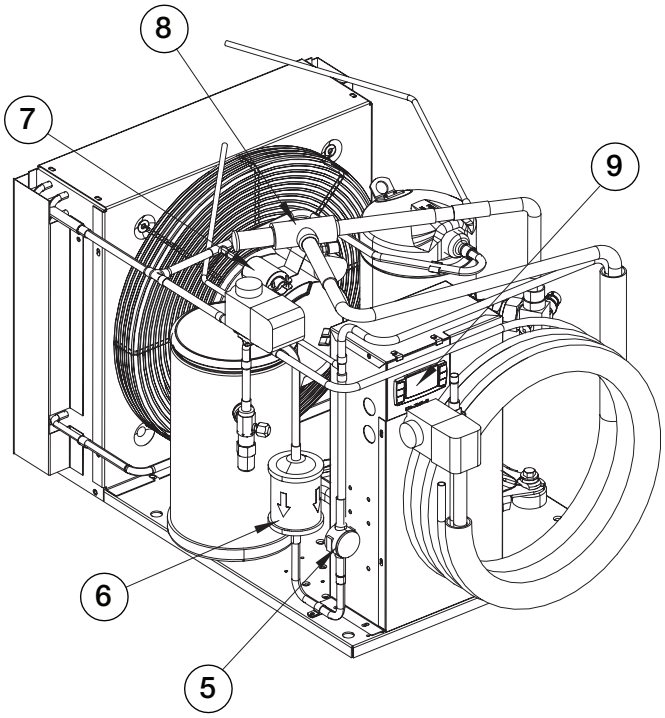

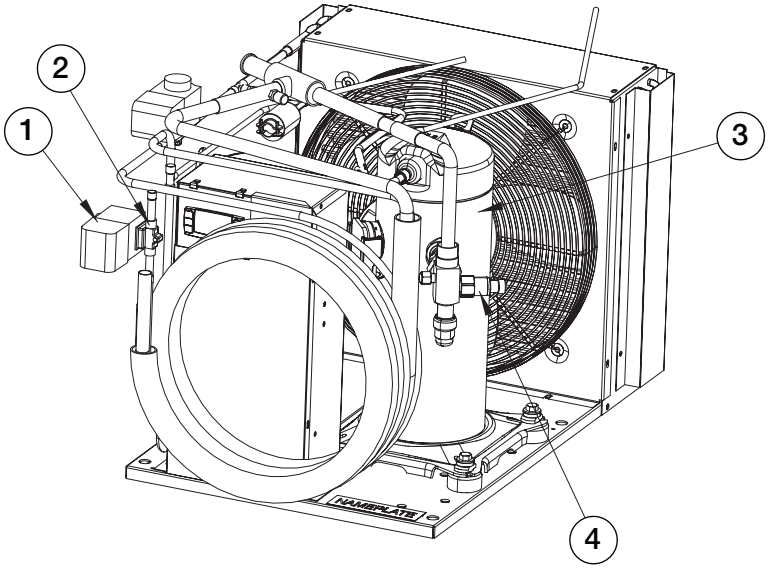

Item	Part	Description	Qty.
1	RE-35155	Coil, Solenoid, 120V, 18Z7612	2
2	VA-29898	Valve, Liquid Line Solenoid	2
3	RE-37503	Compressor, 1.5 HP, LO, R404A, 230V, 1PH	1
4	RE-37506	Transducer, Suction Pressure, 929-0114-00	1
5	RE-37505	Sight Glass	1
6	FI-37502	Filter Drier	1
7	SW-37504	Switch, High Pressure, 985-7031-01	1
8	VA-29900	Valve, Pressure Regulator	1
9	CC-37516	Pressure Control	1

QC3-40 Compressor Housing

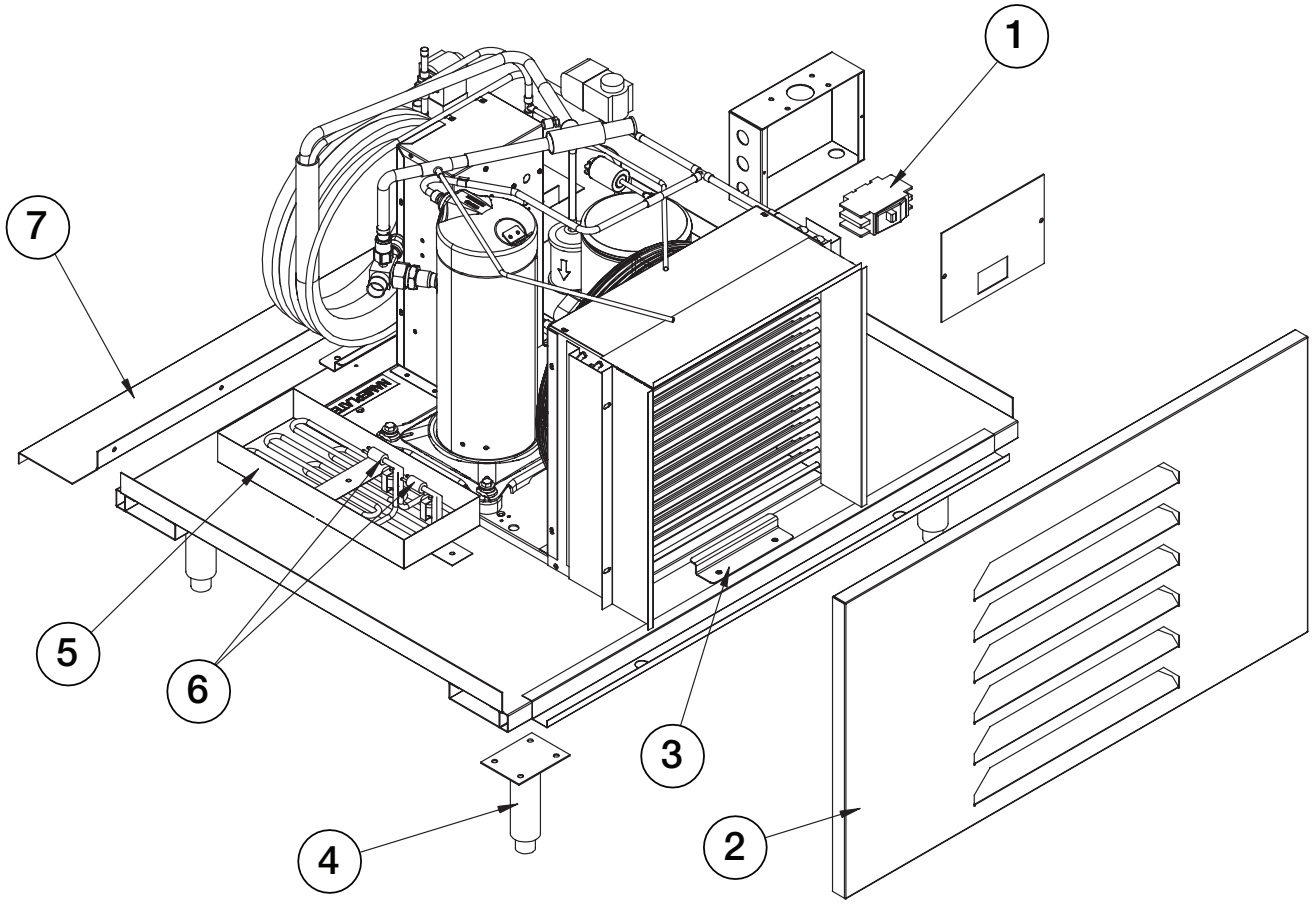

Item	Part	Description	Qty.
1	FU-29901	Breaker, 2 Pole 20 Amp, 60 Hz	1
2	PE-37484	Compressor Louver	1
3	BT-29950	Hold Down Clip	2
4	5014889	Leg Assembly (Set of 4)	1
	LG-29904	Leg, 6"	4
*	SC-29824	Leg Bolt, 1/4-20 x 3.5" Shoulder Bolt Hex Head	16
5	PN-29903	Evaporator Pan, without Element	1
6	WI-35102	Evaporator Pan Heater	2
7	CL-37485	Clip, Air Restriction	1
8*	CD-35103	Cord and Plug, 125/250V 20 Amp 14-20P, 9' Long	1

*not shown

Service

QC3-40 Coil

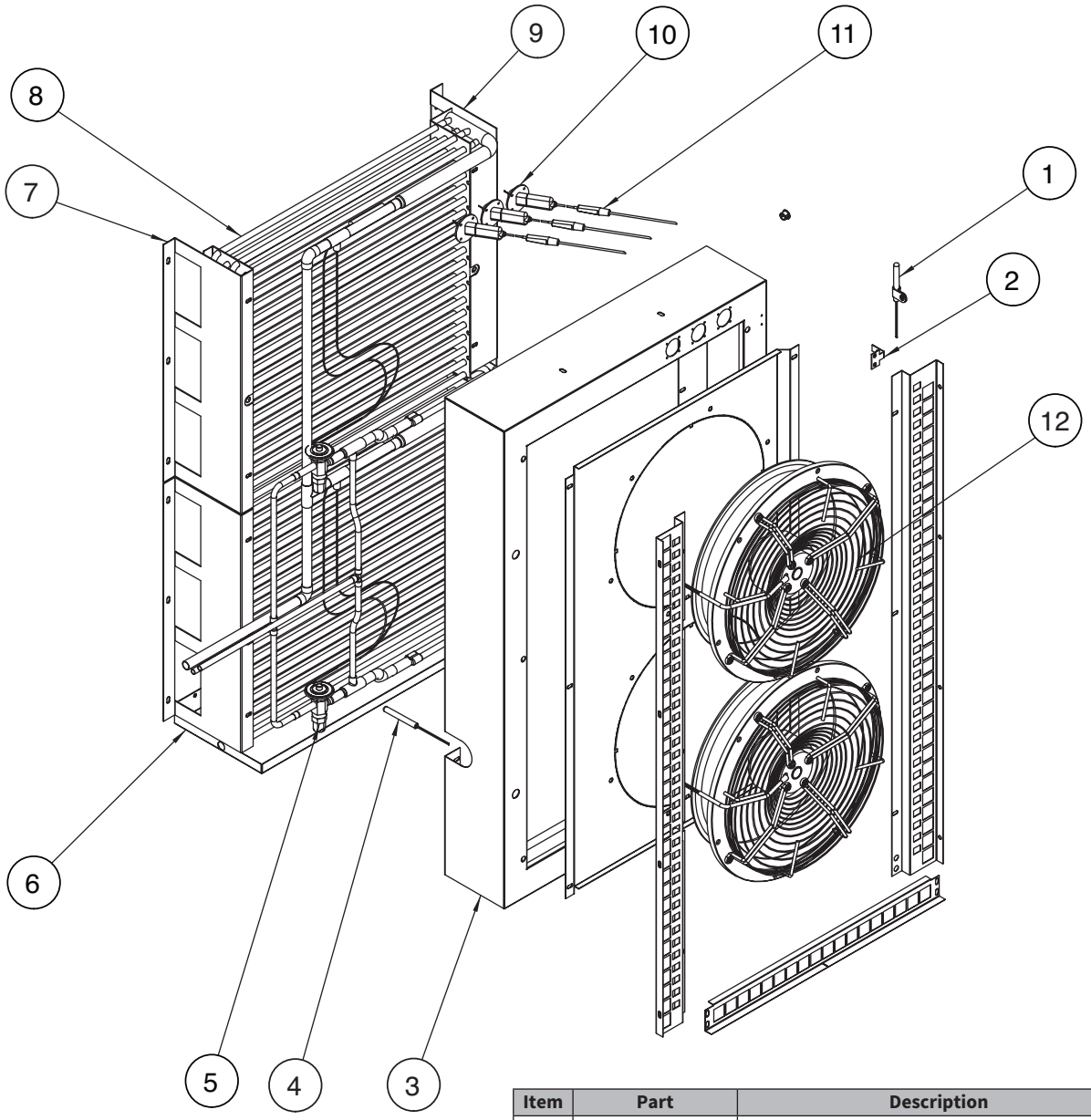

Item	Part	Description	Qty.
1	SN-33541	Air Sensor	1
2	**	Air Sensor Mounting Bracket	1
3	**	Housing, Refrigeration Enclosure	1
4	PR-37483	Coil Sensor/, Defrost/Sensor	1
5	VA-29906	Valve, Expansion	2
6	PN-37583	Drain Pan, Evaporator, Right	1
	PN-37582	Drain Pan, Evaporator, Left	1
7	CL-37751	Clip, Left, Coil	2
8	RE-29905	Evaporator Coil	2
9	CL-37752	Clip, Right, Coil	2
10	PR-35486	Probe Receptacle	3
11	PR-35770	Probe	3
12	FA-29945	Evaporator Fan	2

**not available from factory

QC3-40 Door

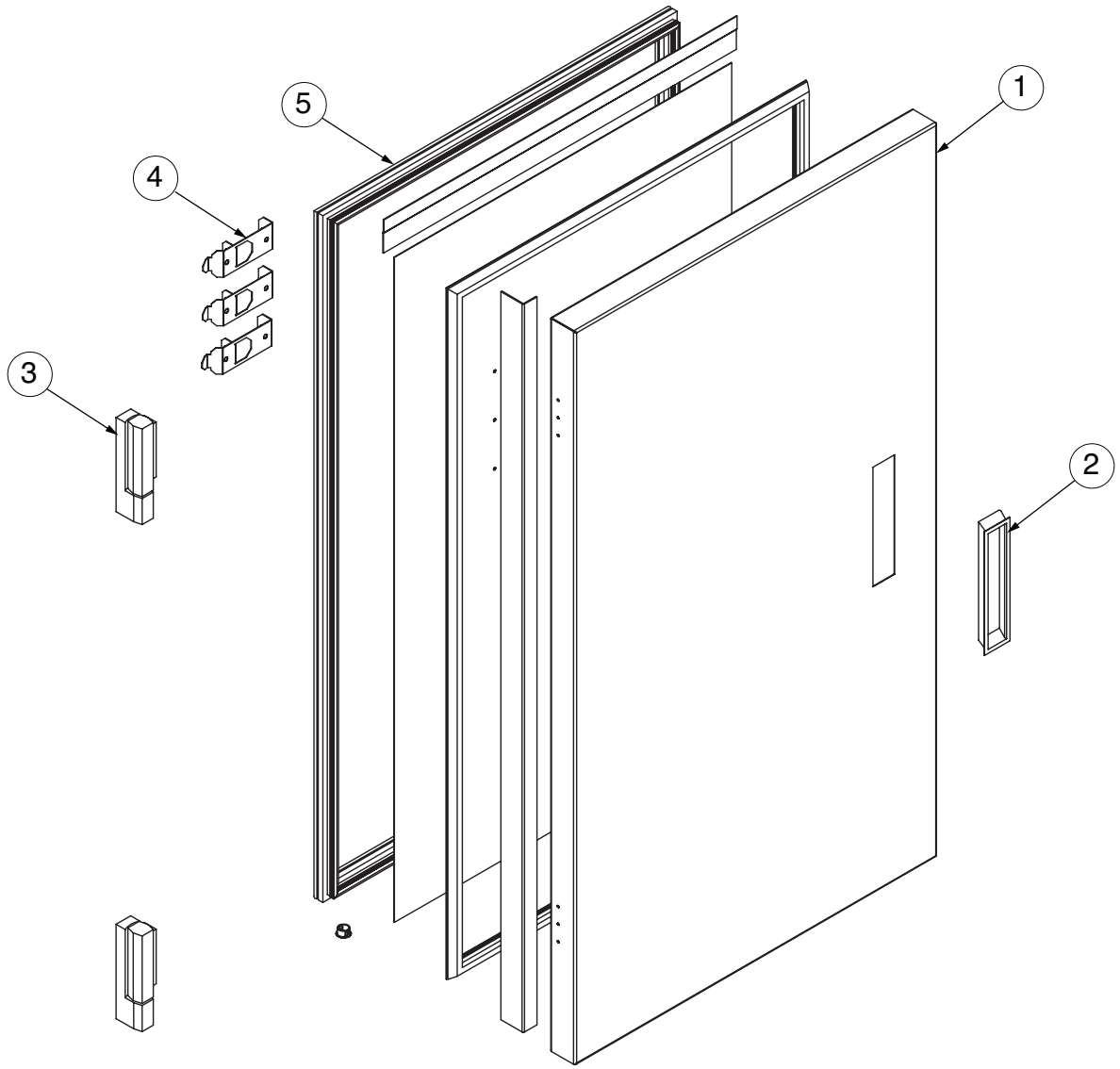

Item	Part	Description	Qty.
1	DR-36748	Door Assembly, Left-Hand	1
	Contact factory	Door Assembly, Right-Hand	1
2	HD-29958	Handle, Door	1
3	HG-36650	Hinge	1
4	HL-29840	Food Probe Holder	3
5	GS-29914	Gasket, Door	1

QC3-40 Pan Supports

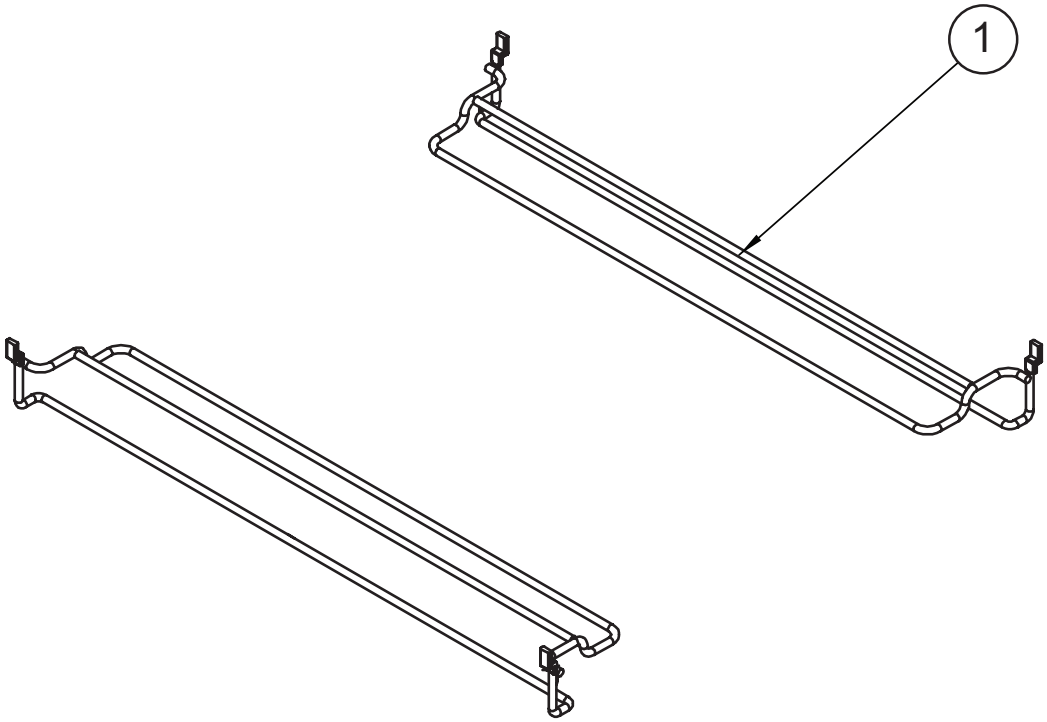

Item	Part	Description	Qty.
1	SR-36881	Rack, Pan Support	18

QC3-40 Control Panel

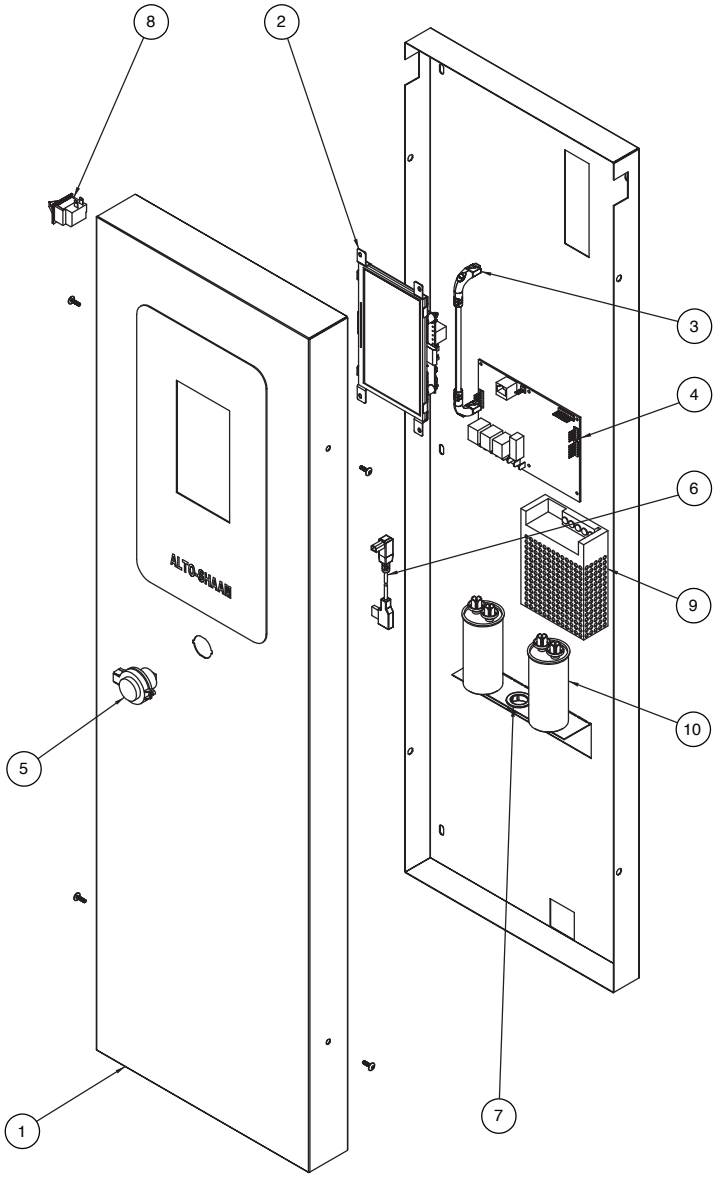

Item	Part	Description	Qty.
1	PE-37600	Control Panel/Panel Overlay Assembly, Left-Hand	1
	PE-37601	Control Panel/Panel Overlay Assembly, Right-Hand	1
2	5021440	LCD Display Assembly, 7"	1
3	CB-38675	Ethernet Cable	1
4	CC-39540	Control Board and Firmware	1
5	CB-35746	Connector, USB	1
6	CB-36571	USB Communication Cable with Plug	1
7	BU-33619	Grommet, 1" Hole	1
8	SW-36882	Door Switch	1
9	BA-29927	Power Supply	1
10	CU-29964	Capacitor	2
11	5018422	Beeper Assembly (not shown)	1

QC3-100 Compressor

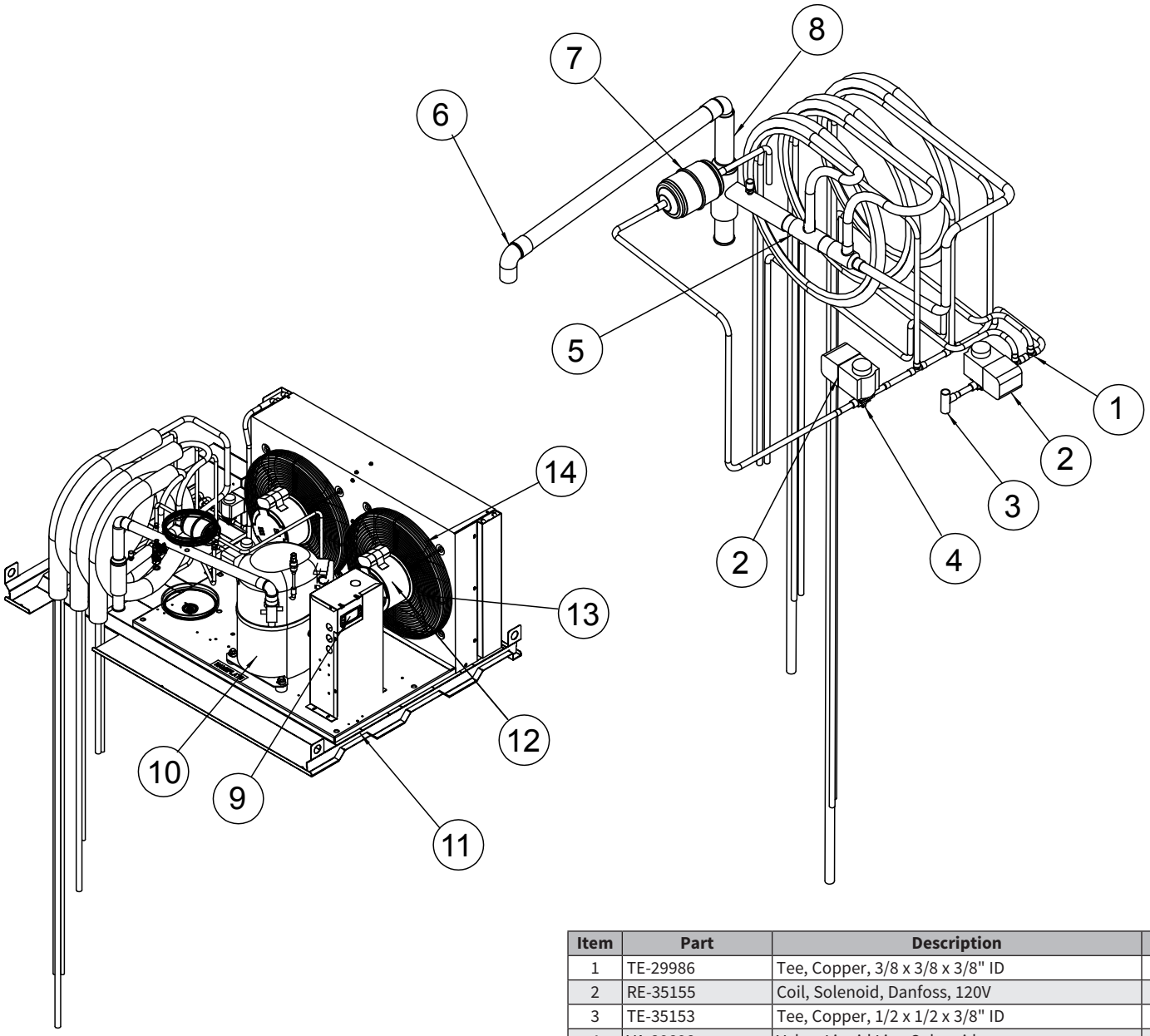

Item	Part	Description	Qty.
1	TE-29986	Tee, Copper, 3/8 x 3/8 x 3/8" ID	4
2	RE-35155	Coil, Solenoid, Danfoss, 120V	2
3	TE-35153	Tee, Copper, 1/2 x 1/2 x 3/8" ID	1
4	VA-29898	Valve, Liquid Line Solenoid	2
5	TE-35154	Tee, Copper, 1-1/8 x 1-1/8 x 5/8" OD	1
6	EL-35152	Elbow, Copper 1/4" Street	2
7	FI-29987	Filter Drier	1
8	VA-29988	Valve, Pressure Regulator	1
9	CC-37516	Pressure Control	1
10	**	Compressor	1
11	RE-29983	Condensing Unit, 3HP 208/230V 1 Phase	1
	RE-35172	Condensing Unit, 3HP 208/230V 3 Phase	1
12	**	Condensor Fan Motor	1
13	**	Condensor Fan Blade	1
14	**	Condensor Fan Guard	1

**not available from factory

QC3-100 Coil

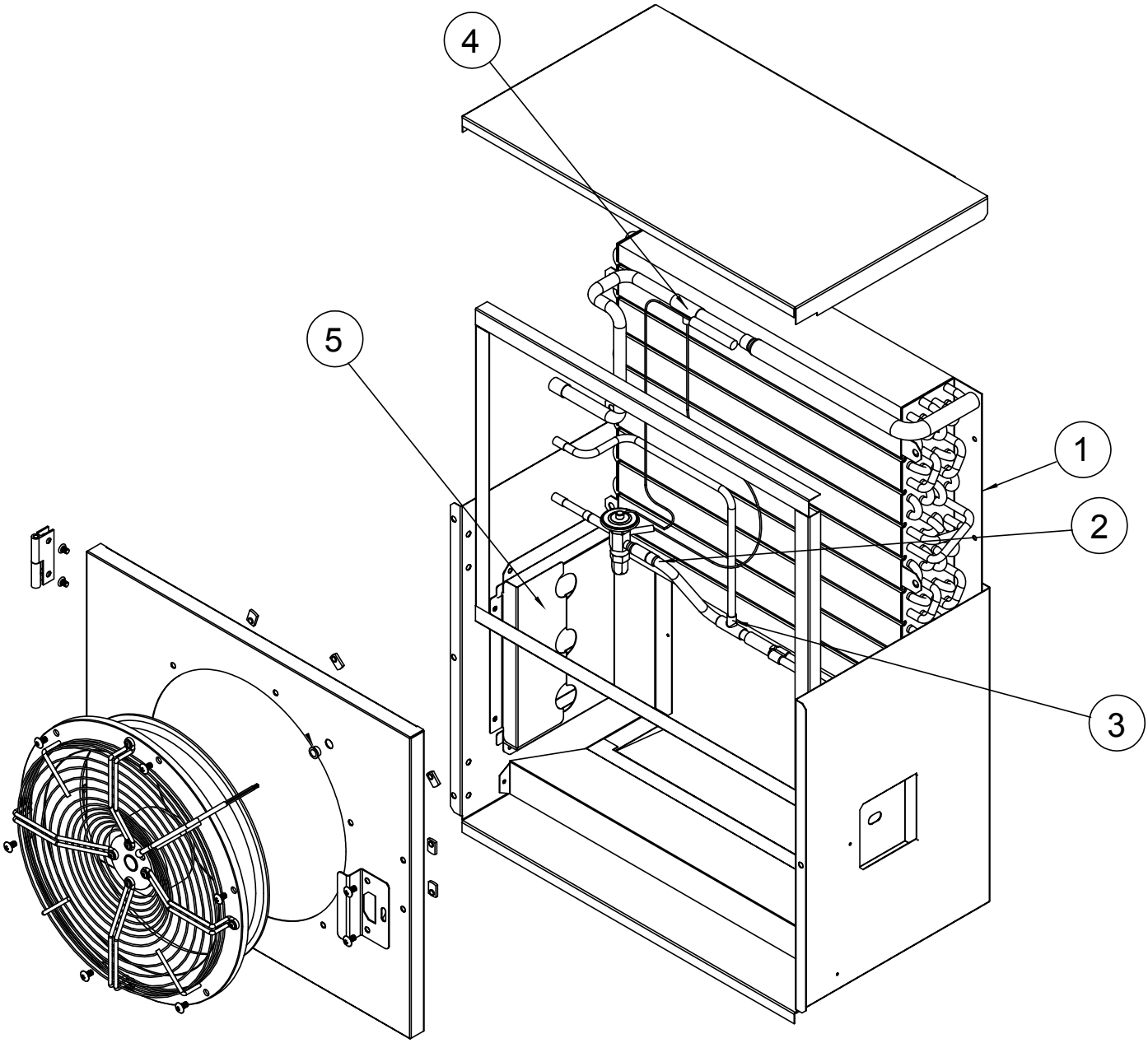

Item	Part	Description	Qty.
1	RE-29905	Coil Assembly, 19x20	3
2	VA-29906	Valve, Expansion	3
3	TE-35153	Tee, Copper, 1/2 x 1/2 x 3/8" ID	1
4	TE-29985	Tee, Copper, 1/2" x 1/2" x 1/4" ID	1
5	CV-37624	Cover	
6*	FA-29945	Evaporator Fan Motor	3
7*	PR-37483	Coil Sensor, Defrost/Sensor	1

*not shown

QC3-100 Door

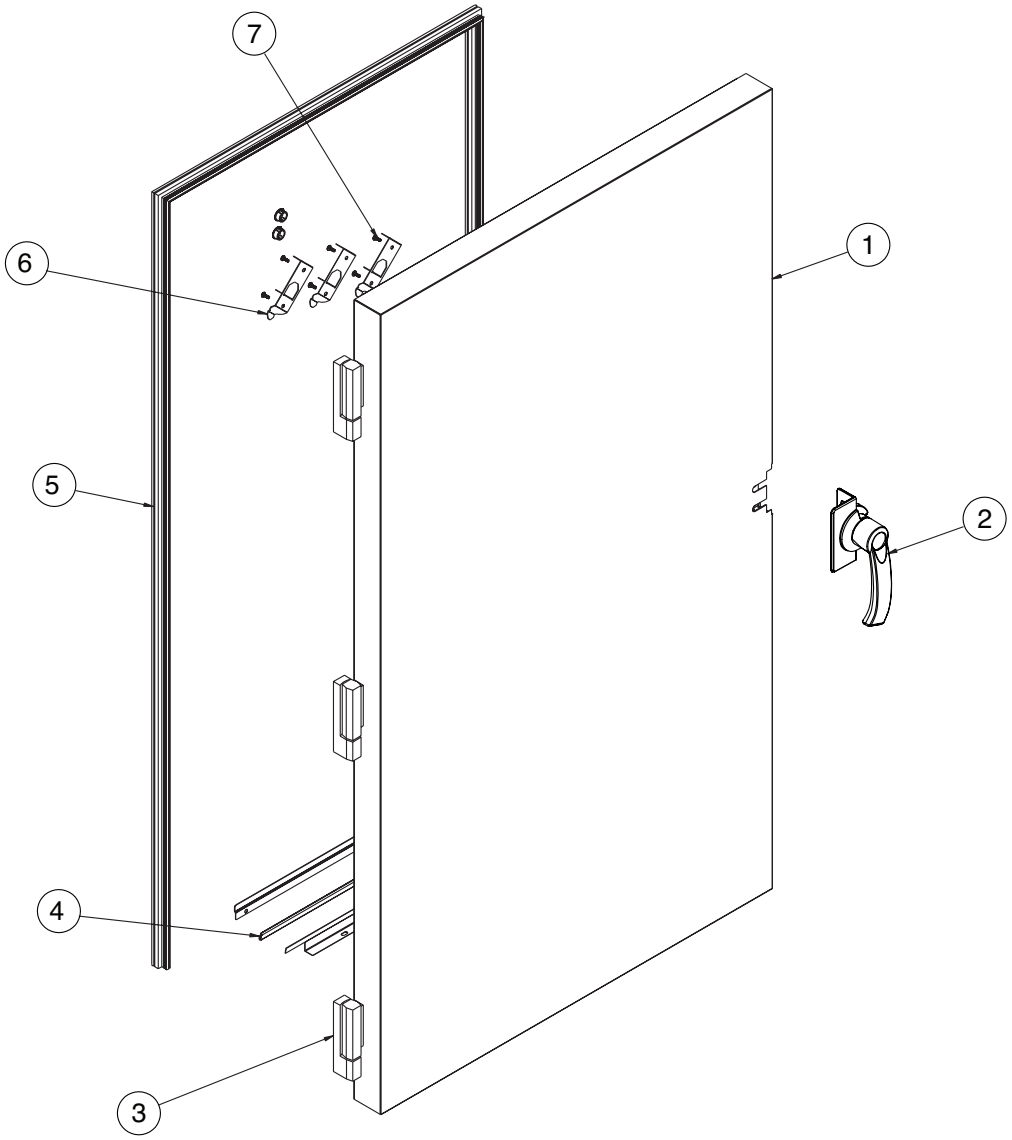

Item	Part	Description	Qty.
1	DR-29990	Door Assembly, Left-Hand	1
	Contact factory	Door Assembly, Right-Hand	1
2	HD-26967	Handle, Door, LH	1
	HD-26966	Handle, Door, RH	1
3	HG-36650	Hinge, Adjustable	3
4	GS-29994	Gasket, Compression	1
5	GS-29993	Gasket, Door	1
6	HL-29840	Food Probe Holder	3
7	SC-29991	Bolt, 8-32 X 1/2, Phillips Truss	6

QC3-100 Interior (left-hand door shown)

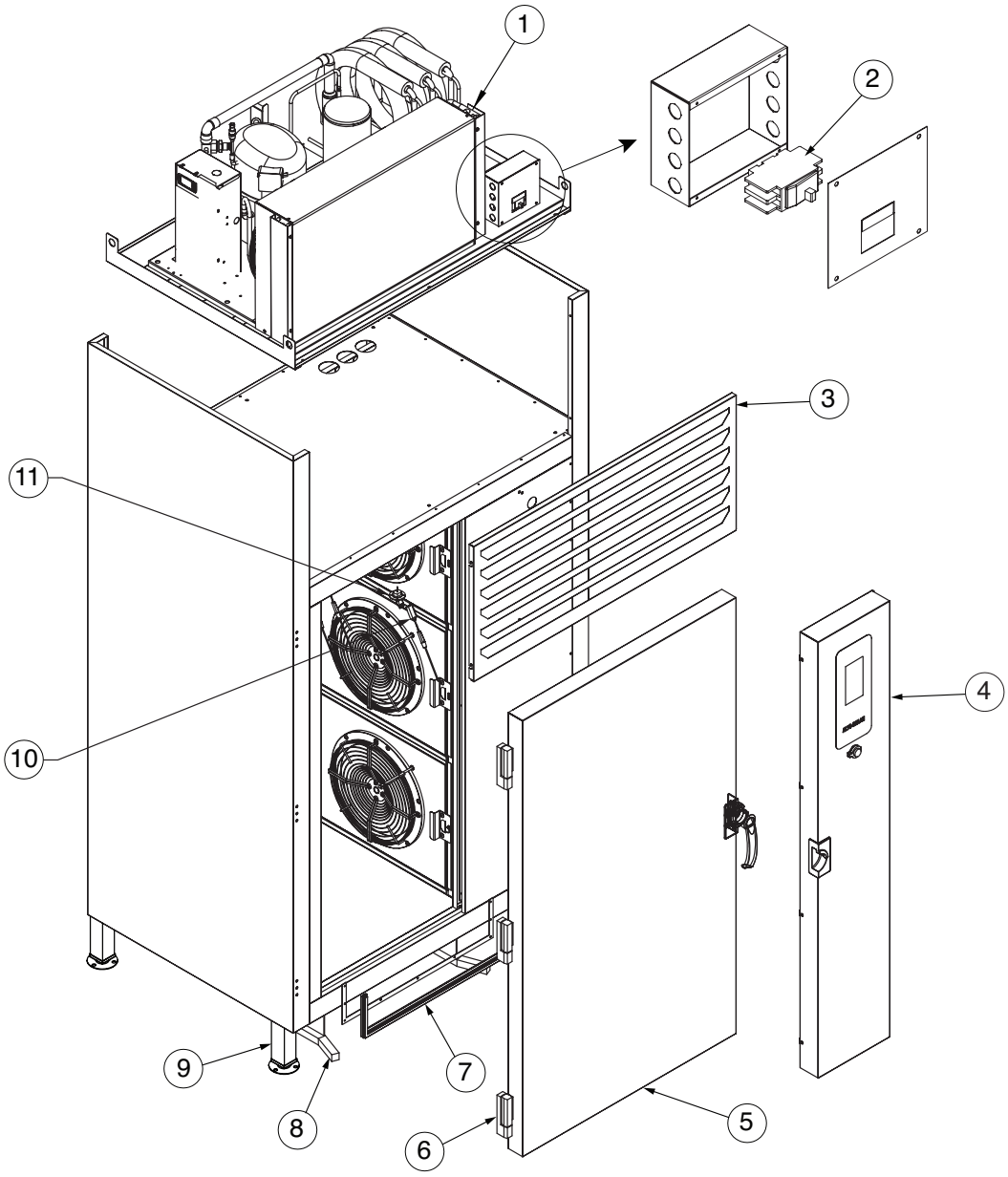

Item	Part	Description	Qty.
1	RE-29983	Condensing Unit, 3HP 208/230V 1 Phase	1
	RE-35172	Condensing Unit, 3HP 208/230V 3 Phase	1
2	FU-29996	Breaker, 2 Pole, 30 Amp	1
3	PN-29842	Louver Panel	1
4	PN-37602	Panel, Control Panel Assembly, Left-Hand	1
	PN-37603	Panel, Control Panel Assembly, Right-Hand	1
5	DR-29990	Door Assembly, Left-Hand	1
	Contact factory	Door Assembly, Right-Hand	1

Item	Part	Description	Qty.
6	HG-36650	Hinge, Adjustable	3
7	GS-35308	Gasket, Compression	1
8	Contact factory	Trolley Guides	1
9	5016746	Leg Assembly (Set of 4) - Not factory installed	1
10	PR-35770	Probe, Quick Connect	3
11	PR-35486	Probe, Receptacle	3

QC3-100/NT Narrow Trolley (left-hand door shown)

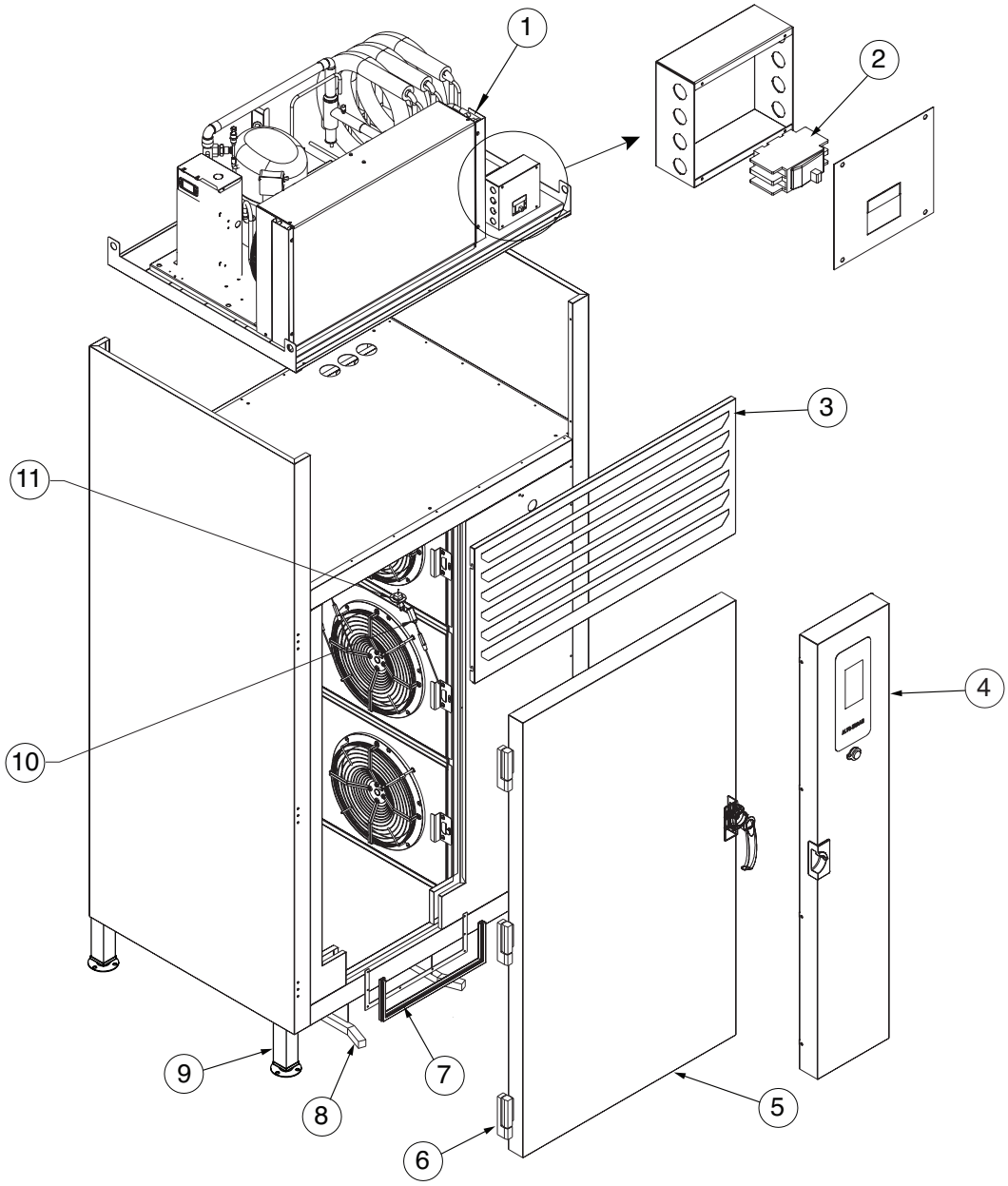

Item	Part	Description	Qty.
1	RE-29983	Condensing Unit, 3HP 208/230V 1 Phase	1
	RE-35172	Condensing Unit, 3HP 208/230V 3 Phase	1
2	FU-29996	Breaker, 2 Pole, 30 Amp	1
3	PN-29842	Louver Panel	1
4	PN-37602	Panel, Control Panel Assembly, Left-Hand	1
	PN-37603	Panel, Control Panel Assembly, Right-Hand	1
5	DR-37463	Door Assembly, Narrow Trolley, Left-Hand	1
	DR-37464	Door Assembly, Narrow Trolley, Right-Hand	1

Item	Part	Description	Qty.
6	HG-36650	Hinge, Adjustable	3
7	GS-37461	Gasket, Lower Trolley	1
8	Contact factory	Trolley Guides (Set of 2)	1
9	5016746	Leg Assembly (Set of 4) - Not factory installed	1
10	PR-35770	Probe, Quick Connect	3
11	PR-35486	Probe, Receptacle	3

QC3-100 Control Panel (left-hand shown)

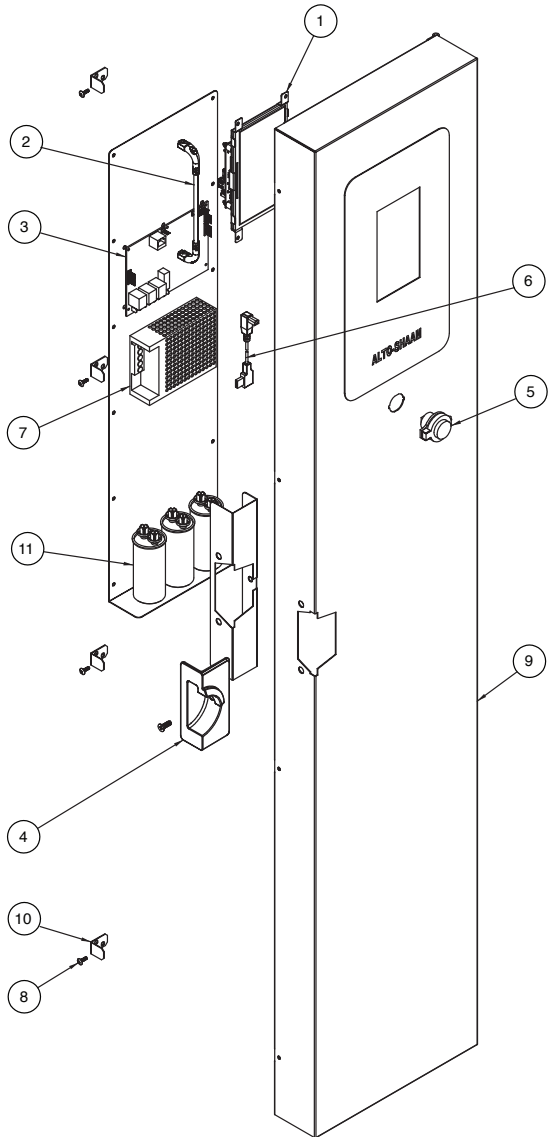

Item	Part	Description	Qty.
1	5021440	LCD Display Assembly, 7"	1
2	CB-38675	Ethernet Cable	1
3	CC-39540	Control Board and Firmware	1
4	LT-26968	Door Latch, Left-Hand	1
	LT-26969	Door Latch, Right-Hand	1
5	CB-35746	Connector, USB, Panel Mount	1
6	CB-36571	USB Communication Cable	1
7	BA-29927	Power Supply, 115V-12VDC, 40 W, 60C OP Temp	1

Item	Part	Description	Qty.
8	SC-29632	Bolt, 1/4-20 x 3.5" Shoulder Bolt Hex Head	1
9	PE-37602	Control Panel, Left-Hand	1
	PE-37603	Control Panel, Right-Hand	1
10	PN-35934	Bracket, Mounting	1
11	CU-29964	Capacitor, 14MFD, 440VAC	1
12	5018422	Beeper Assembly (not shown)	1
13	LT-3738	Door Switch (not shown)	1

Limited Warranty

Alto-Shaam, Inc. warrants to the original purchaser only that any original part that is found to be defective in material or workmanship will, at Alto-Shaam's option, subject to provisions hereinafter stated, be replaced with a new or rebuilt part.

The original parts warranty period is as follows:

For the refrigeration compressor on Alto-Shaam Quickchillers™, five (5) years from the date of installation of appliance.

For the heating element on Halo Heat® cooking and holding ovens, as long as the original purchaser owns the oven. This excludes holding only equipment.

For all other original parts, one (1) year from the date of installation of appliance or fifteen (15) months from the shipping date, whichever occurs first.

The labor warranty period is one (1) year from the date of installation or fifteen (15) months from the shipping date, whichever occurs first.

Alto-Shaam will bear normal labor charges performed during standard business hours, excluding overtime, holiday rates or any additional fees.

To be valid, a warranty claim must be asserted during the applicable warranty period. This warranty is not transferable.

This warranty does not apply to:

1. Calibration.
2. Replacement of light bulbs, door gaskets, and/or the replacement of glass due to damage of any kind.
3. Equipment damage caused by accident, shipping, improper installation or alteration.
4. Equipment used under conditions of abuse, misuse, carelessness or abnormal conditions, including but not limited to, equipment subjected to harsh or inappropriate chemicals, including but not limited to, compounds containing chloride or quaternary salts, poor water quality, or equipment with missing or altered serial numbers.
5. Damage incurred as a direct result of poor water quality, inadequate maintenance of steam generators and/or surfaces affected by water quality. Water quality and required maintenance of steam generating equipment is the responsibility of the owner/operator.
6. Damage caused by use of any cleaning agent other than Alto-Shaam's Combitherm® Cleaner, including but not limited to damage due to chlorine or other harmful chemicals. **Use of Alto-Shaam's Combitherm® Cleaner on Combitherm® ovens is highly recommended.**
7. Any losses or damage resulting from malfunction, including loss of product, food product, revenue, or consequential or incidental damages of any kind.
8. Equipment modified in any manner from original model, substitution of parts other than factory authorized parts, removal of any parts including legs, or addition of any parts.

This warranty is exclusive and is in lieu of all other warranties, express or implied, including the implied warranties of merchantability and fitness for a particular purpose. In no event shall Alto-Shaam be liable for loss of use, loss of revenue or profit, or loss of product, or for any indirect, special, incidental, or consequential damages. No person except an officer of Alto-Shaam, Inc. is authorized to modify this warranty or to incur on behalf of Alto-Shaam any other obligation or liability in connection with Alto-Shaam equipment.

Effective November 1, 2012

W164 N9221 Water Street • P.O. Box 450
Menomonee Falls, Wisconsin 53052-0450 U.S.A.

PHONE: 262.251.3800 • 800.558.8744 U.S.A. / CANADA
FAX: 262.251.7067 • 800.329.8744 U.S.A. ONLY
www.alto-shaam.com