HOSHIZAKI

Instruction Manual

Self-Contained Crescent Cuber

Models
KM-231BAK
KM-301BAK, BWK

hoshizakiamerica.com

Issued: 5-8-2025

⚠ WARNING

Only qualified service technicians should install and service the appliance. To obtain the name and phone number of your local Hoshizaki Certified Service Representative, visit www.hoshizakiamerica.com. No installation, operation, or maintenance should be undertaken until the technician has thoroughly read this Instruction Manual. No service should be undertaken until the technician has thoroughly read the service manual available at www.hoshizakiamerica.com. Likewise, the owner/manager should not proceed to operate the appliance until the installer has instructed them on its proper operation. Failure to install, operate, and maintain the appliance in accordance with this manual will adversely affect safety, performance, component life, and warranty coverage and may result in costly water damage. Proper installation is the responsibility of the installer. Product failure or property damage due to improper installation is not covered under warranty

Hoshizaki provides this manual primarily to assist qualified service technicians in the installation, operation, maintenance, and service of the appliance.

Should the reader have any questions or concerns which have not been satisfactorily addressed, please call, send an e-mail message, or write to the Hoshizaki Technical Support Department for assistance.

Phone: 1-800-233-1940; (770) 487-2331

E-mail: tech-support@hoshizaki.com

HOSHIZAKI AMERICA, INC.
618 Highway 74 South
Peachtree City, GA 30269
Attn: Hoshizaki Technical Support Department

NOTE: To expedite assistance, all correspondence/communication MUST include the following information:

- Model Number _____
- Serial Number _____
- Complete and detailed explanation of the problem.

IMPORTANT
This manual should be read carefully before the appliance is installed and operated. Read the warnings and guidelines contained in this manual carefully as they provide essential information for the continued safe use and maintenance of the appliance. Retain this manual for any further reference that may be necessary.

Contents

Important Safety Information 4
I. Specifications 9
A. Construction 9
B. Electrical and Refrigerant Data 10
C. Dimensions/Connections 11
1. KM-231BAK 11
2. KM-301BAK 12
3. KM-301BWK 13
II. Installation and Operating Instructions 14
A. Location 14
B. Checks Before Installation 16
C. How to Remove Louver 16
D. Setup 17
E. Electrical Connection 18
F. Water Supply and Drain Connections 19
1. Icemaker 20
2. Water-Cooled Condenser 21
G. Final Checklist 23
1. Pre-Startup 23
2. Post-Startup 23
III. Operating Instructions 24
A. Important Notes About Usage 24
B. Startup and Bin Control Check 25
IV. Maintenance 27
A. Maintenance Schedule 27
B. Cleaning and Sanitizing Instructions 28
V. Preparing the Appliance for Periods of Non-Use 32
VI. Decommissioning and Disposal 34

Important Safety Information

Throughout this manual, notices appear to bring your attention to situations which could result in death, serious injury, damage to the appliance, or damage to property.

	R-290 Class A3 Flammable Refrigerant Used
⚠ DANGER	**Indicates a hazardous situation that, if not avoided, will result in death or serious injury.**
⚠ WARNING	**Indicates a hazardous situation that, if not avoided, could result in death or serious injury.**
NOTICE	**Indicates a situation that, if not avoided, could result in damage to the appliance or property.**
IMPORTANT	**Indicates important information about the use and care of the appliance.**

⚠ DANGER

Risk of Fire or Explosion
Flammable Refrigerant Used

- Only qualified service technicians should install and service the appliance.
- No installation, operation, or maintenance should be undertaken until the technician has thoroughly read this Instruction Manual. All safety precautions must be followed.
- No service should be undertaken until the technician has thoroughly read the Service Manual available at www.hoshizakiamerica.com. All safety precautions must be followed.
- This appliance to be installed in accordance with the Safety Standard for Refrigeration Systems ANSI/ASHRAE 15.
- Follow handling instructions carefully in compliance with national regulations.
- Do not use mechanical devices or other means to accelerate the defrosting process or to clean, other than those recommended by the manufacturer.
- Do not puncture refrigerant tubing. Risk of fire or explosion due to puncture of refrigerant tubing; follow handling instructions carefully.
- Servicing shall be done by trained service personnel with certified competence in handling flammable refrigerants to minimize the risk of possible ignition due to incorrect parts or improper service.
- Component parts shall be replaced with like components. so as to minimize the risk of possible ignition due to incorrect parts.
- Dispose of properly in accordance with federal or local regulations.
- Do not pierce or burn.
- Be aware that refrigerants may not contain an odor.
- Do not damage the refrigeration circuit.
- See nameplate for R-290 refrigerant charge:
  - If greater than 114 g (4 oz.), do not install in public corridor or lobby.
  - If greater than 152 g (5.3 oz.), do not install within 6 m (20 ft) of open flame.
- The appliance shall be stored in a room without continuously operating ignition sources (for example: open flames, an operating gas appliance, or an operating electric heater).

⚠ DANGER continued

- Do not place any potential ignition sources in or near the appliance.
- Keep clear of obstruction all ventilation openings in the appliance enclosure or in the structure for building-in.
- No potential sources of ignition are to be used in the searching for or detection of refrigerant leaks.
- Do not use electrical appliances inside the appliance unless they are of the type recommended by the manufacturer.
- Do not store explosive substances such as aerosol cans with a flammable propellant in this appliance.
- Check that cabling will not be subject to wear, corrosion, excessive pressure, vibration, sharp edges, or any other adverse environmental effects. The check shall also take into account the effects of aging or continual vibration from sources such as compressors or fans.
- Ensure that the area is in the open or that it is adequately ventilated before breaking into the system or conducting any hot work. A degree of ventilation shall continue during the period that the work is carried out. The ventilation should safely disperse any released refrigerant and preferably expel it externally into the atmosphere.

Risque D'Incendie ou D'Explosion Fluide Frigorigène Inflammable Utilisé

- Seuls des techniciens de service qualifiés doivent installer et entretenir l'appareil.
- Aucune installation, opération ou maintenance ne doit être entreprise avant que le technicien n'ait lu attentivement ce manuel d'instructions. Toutes les précautions de sécurité doivent être suivies.
- Aucune opération d'entretien ne doit être entreprise avant que le technicien n'ait lu attentivement le manuel d'entretien disponible sur le site www.hoshizakiamerica.com. Toutes les précautions de sécurité doivent être suivies.
- Cet appareil doit être installé conformément à la norme de sécurité pour les systèmes de réfrigération ANSI/ASHRAE 15.
- Suivez attentivement les instructions de manutention conformément aux réglements nationaux.
- Ne pas utiliser de dispositifs mécaniques ou d'autres moyens pour accélérer le processus de dégivrage ou pour nettoyer, autres que ceux recommandés par le fabricant.
- Ne pas perforer la conduite de fluide frigorigène. Risque d'incendie ou d'explosion en cas de perforation d'une canalisation de fluide frigorigène; suivez attentivement les instructions de manutention.
- L'entretien doit être effectué par du personnel formé et certifié pour la manipulation de réfrigérants inflammables afin de réduire au minimum le risque d'inflammation dû à des pièces incorrectes ou à un entretien inadéquat.

⚠ DANGER Continué

- Les pièces doivent être remplacées par des pièces similaires, de manière à réduire au minimum le risque d'inflammation dû à des pièces incorrectes.
- Mettre au rebut conformément aux réglements fédéraux ou locaux.
- Ne pas percer ou brûler.
- Attention, les fluides frigorigénes peuvent ne pas dégager d'odeur.
- Ne pas endommager les composants du circuit de réfrigération.
- Voir plaque signalétique pour la charge de réfrigérant R-290:
  - Si elle est supérieure à 114 g (4 oz.), ne pas l'installer dans un couloir public ou un hall d'entrée.
  - Si elle est supérieure à 152 g (5,3 oz.), ne pas l'installer à moins de 6 m (20 pi) d'une flamme nue.
- L'appareil doit être entreposé dans un local ne contenant pas de sources d'inflammation permanentes (flammes nues, appareil à gaz ou dispositif de chauffage électrique en fonctionnement, par exemple).
- Ne placer aucune source d'inflammation potentielle à l'intérieur ou à proximité de l'appareil.
- Ne pas obstruer les ouvertures de ventilation dans l'enceinte de l'appareil ou dans la structure d'encastrement.
- Aucune source potentielle d'inflammation ne doit être utilisée pour rechercher ou détecter des fuites de réfrigérant.
- Ne pas utiliser d'appareils électriques à l'intérieur de l'appareil, sauf s'ils sont du type recommandé par le fabricant.
- Ne pas entreposer dans cet appareil des substances explosives telles que des bombes aérosols contenant un gaz propulseur inflammable.
- Vérifier que le câblage ne sera pas soumis à l'usure, à la corrosion, à une pression excessive, à des vibrations, à des arêtes vives ou à tout autre effet environnemental négatif. Le contrôle doit également prendre en compte les effets du vieillissement ou des vibrations continues provenant de sources telles que les compresseurs ou les ventilateurs.
- S'assurer que la zone est à l'air libre ou qu'elle est correctement ventilée avant de pénétrer dans le système ou d'effectuer un travail à chaud. Une certaine ventilation doit être maintenue pendant la durée des travaux. La ventilation doit permettre de disperser en toute sécurité tout réfrigérant libéré et, de préférence, de l'expulser dans l'atmosphère.

⚠ WARNING

The appliance should be destined only to the use for which it has been expressly conceived. Any other use should be considered improper and therefore dangerous. The manufacturer cannot be held responsible for injury or damage resulting from improper, incorrect, and unreasonable use. Failure to install, operate, and maintain the appliance in accordance with this manual will adversely affect safety, performance, component life, and warranty coverage and may result in costly water damage. **To reduce the risk of death, electric shock, serious injury, or fire, follow basic precautions including the following**:

- This appliance is not intended for use above 2,000 m (6,561 ft). Installation above 2,000 m (6,561 ft) may adversely affect safety, performance, and component life.
- Wear appropriate personal protective equipment (PPE) when servicing the appliance.
- The appliance must be installed in accordance with applicable national, state, and local codes and regulations.
- The appliance requires an independent power supply of proper capacity. See the nameplate for electrical specifications. Failure to use an independent power supply of proper capacity can result in a tripped breaker, blown fuse, damage to existing wiring, or component failure. This could lead to heat generation or fire.
- **THE APPLIANCE MUST BE GROUNDED.** The appliance is equipped with a NEMA 5-15 three-prong grounding plug to reduce the risk of potential shock hazards. It must be plugged into a properly grounded, independent 3-prong wall outlet. If the outlet is a 2-prong outlet, it is your personal responsibility to have a qualified electrician replace it with a properly grounded, independent 3-prong wall outlet. Do not remove the ground prong from the power cord and do not use an adapter plug. Failure to follow these instructions may result in death, electric shock, or fire.
- To reduce the risk of electric shock, do not touch the control switch or plug with damp hands.
- To reduce the risk of electric shock, make sure the control switch is in the "OFF" position before plugging in or unplugging the appliance.
- Unplug the appliance before servicing.
- Do not use an appliance with a damaged power cord. The power cord should not be altered, jerked, bundled, weighed down, pinched, or tangled. Such actions could result in electric shock or fire. To unplug the appliance, be sure to pull the plug, not the cord, and do not jerk the cord.
- Do not use an extension cord.
- If the supply cord is damaged, it must be replaced by the manufacturer, its service agent, or similarly qualified persons in order to avoid a hazard. Upon replacement, the GREEN ground wire in the power cord must be connected to the designated grounding screw.
- Do not make any alterations to the appliance. Alterations could result in electric shock, injury, fire, or damage to the appliance.
- Appliance is heavy. Use care when lifting or positioning. Work in pairs when needed to prevent injury or damage.

⚠ WARNING continued

- The appliance is not intended for use by persons (including children) with reduced physical, sensory, or mental capabilities, or lack of experience and knowledge, unless they have been given supervision or instruction concerning use of the appliance by a person responsible for their safety.
- Do not splash, pour, or spray water directly onto or into the appliance. This might cause short circuit, electric shock, corrosion, or failure.
- Children should be supervised to ensure that they do not play with the appliance.
- Do not climb, stand, or hang on the appliance or allow children or animals to do so. Serious injury could occur or the appliance could be damaged.
- Be careful not to pinch fingers when opening and closing the door. Be careful when opening and closing the door when children are in the area.
- Do not use combustible spray or place volatile or flammable substances in or near the appliance. They might catch fire.
- Keep the area around the appliance clean. Dirt, dust, or insects in the appliance could cause harm to individuals or damage to the appliance.

NOTICE

- Follow the water supply, drain connection, and maintenance instructions carefully to reduce the risk of costly water damage.
- In areas where water damage is a concern, install in a contained area with a floor drain.
- Install the icemaker in a location that stays above freezing. Normal operating ambient temperature must be within 45°F to 100°F (7°C to 38°C).

NOTICE

- To help ensure that the ice storage bin drain remains clear, follow the instructions in "IV.B. Cleaning and Sanitizing Instructions" once a year or as often as necessary for conditions. If the ice storage bin drain becomes clogged, water could build up in the bin and overflow, leading to costly water damage.
- Do not leave the appliance on during extended periods of non-use, extended absences, or in sub-freezing temperatures. To properly prepare the appliance for these occasions, follow the instructions in "V. Preparing the Appliance for Periods of Non-Use."
- If water collects in the bin and will not drain, turn off the icemaker and close the water supply line shut-off valve. Call for service.
- If water seeps from the base of the appliance, turn off the appliance and close the water supply line shut-off valve. Call for service. Failure to do so could lead to costly water damage.
- Do not place objects on top of the appliance.
- The ice storage bin is for ice use only. Do not store anything else in the ice storage bin.
- Protect the floor when moving the appliance to prevent damage to the floor.
- Do not allow the appliance to bear any outside weight.

I. Specifications

A. Construction

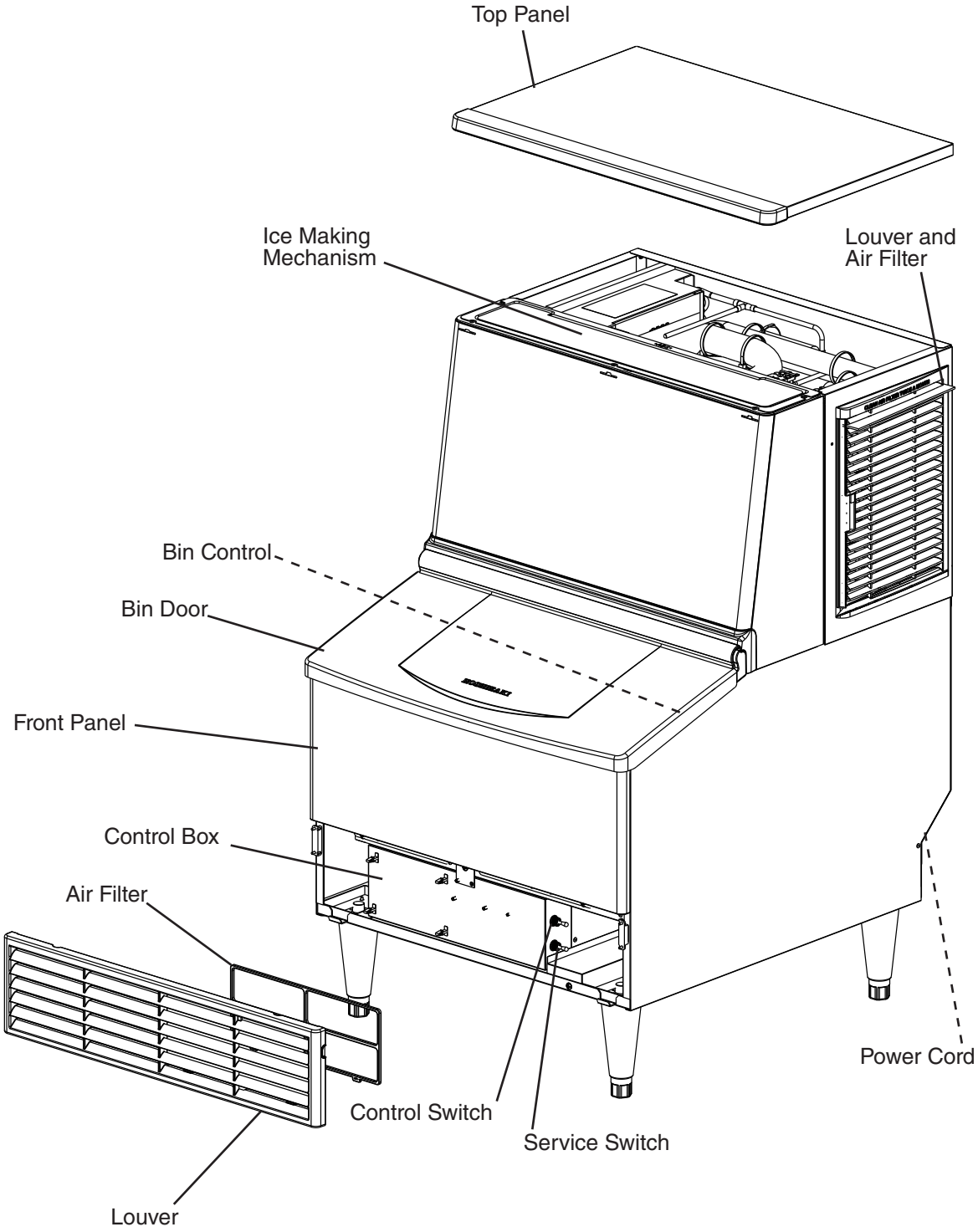

Model Shown: KM-231BAK

B. Electrical and Refrigerant Data

The nameplate provides electrical and refrigerant data and Year of Manufacture (YOM). The nameplate is located inside the ice storage bin. For certification marks, see the nameplate.

We reserve the right to make changes in specifications and design without prior notice.

Model Number	**KM-231BAK**
AC SUPPLY VOLTAGE	~115/60/1
AMPERES	5.2
DESIGN PRESSURE kPa (PSI)	HI-3103 (450) LO-1448 (210)
REFRIGERANT g (oz.)	R-290 115 (4.1)
CLIMATIC CLASS	5
INSULATION BLOWING GAS	HFO 1233zd(E)
MINIMUM ROOM FLOOR AREA m^2 (ft^2)	5.5 (59.2)
HARVEST RATE	≤1,000 LB/DAY (BATCH)

Model Number	**KM-301BAK**	**KM-301BWK**
AC SUPPLY VOLTAGE	~115/60/1	**DATA PENDING**
AMPERES	5.7	
DESIGN PRESSURE kPa (PSI)	HI-3103 (450) LO-1448 (210)	
REFRIGERANT g (oz.)	R-290 135 (4.8)	
CLIMATIC CLASS	5	
INSULATION BLOWING GAS	HFO 1233zd(E)	
MINIMUM ROOM FLOOR AREA m^2 (ft^2)	6.5 (69.5)	
HARVEST RATE	≤1,000 LB/DAY (BATCH)	

Note: Climatic Class 5: This appliance electrical safety tested for operation in maximum ambient temperature of 104°F (40°C) with 40% relative humidity. However, normal operating ambient temperature must be within 45°F to 100°F (7°C to 38°C); Normal operating water temperature must be within 45°F to 90°F (7°C to 32°C). Operation of the appliance, for extended periods, outside of these normal temperature ranges may affect appliance performance.

C. Dimensions/Connections

1. KM-231BAK

Unit: mm [inches]

NOTICE
Allow at least 2" (5 cm) clearance at the right side for proper air circulation and at least 5/8" (15 mm) clearance at top for ease of maintenance and/or service should they be required.

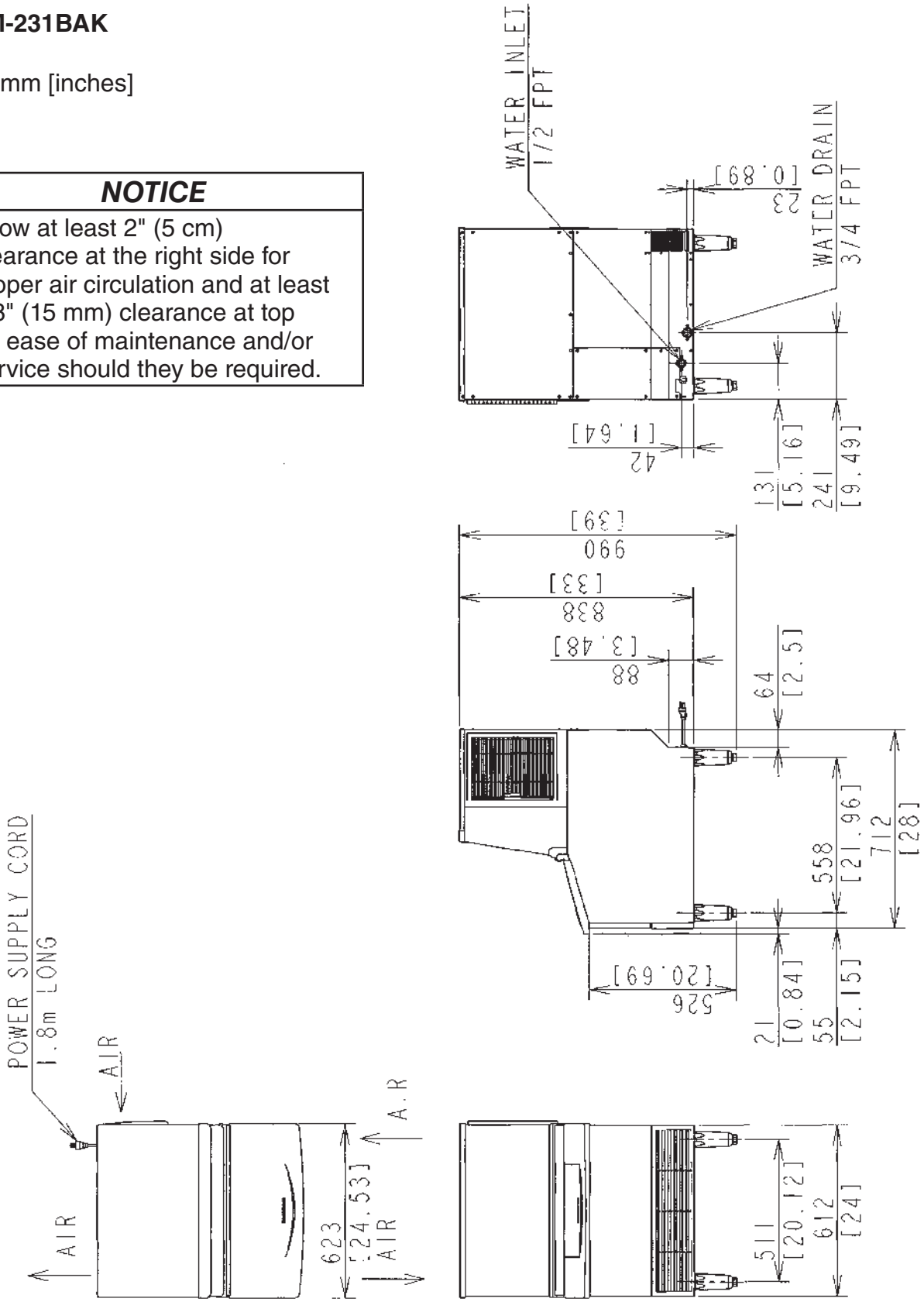

2. KM-301BAK

Unit: mm [inches]

NOTICE
Allow at least 2" (5 cm) clearance at the right side for proper air circulation and at least 5/8" (15 mm) clearance at top for ease of maintenance and/or service should they be required.

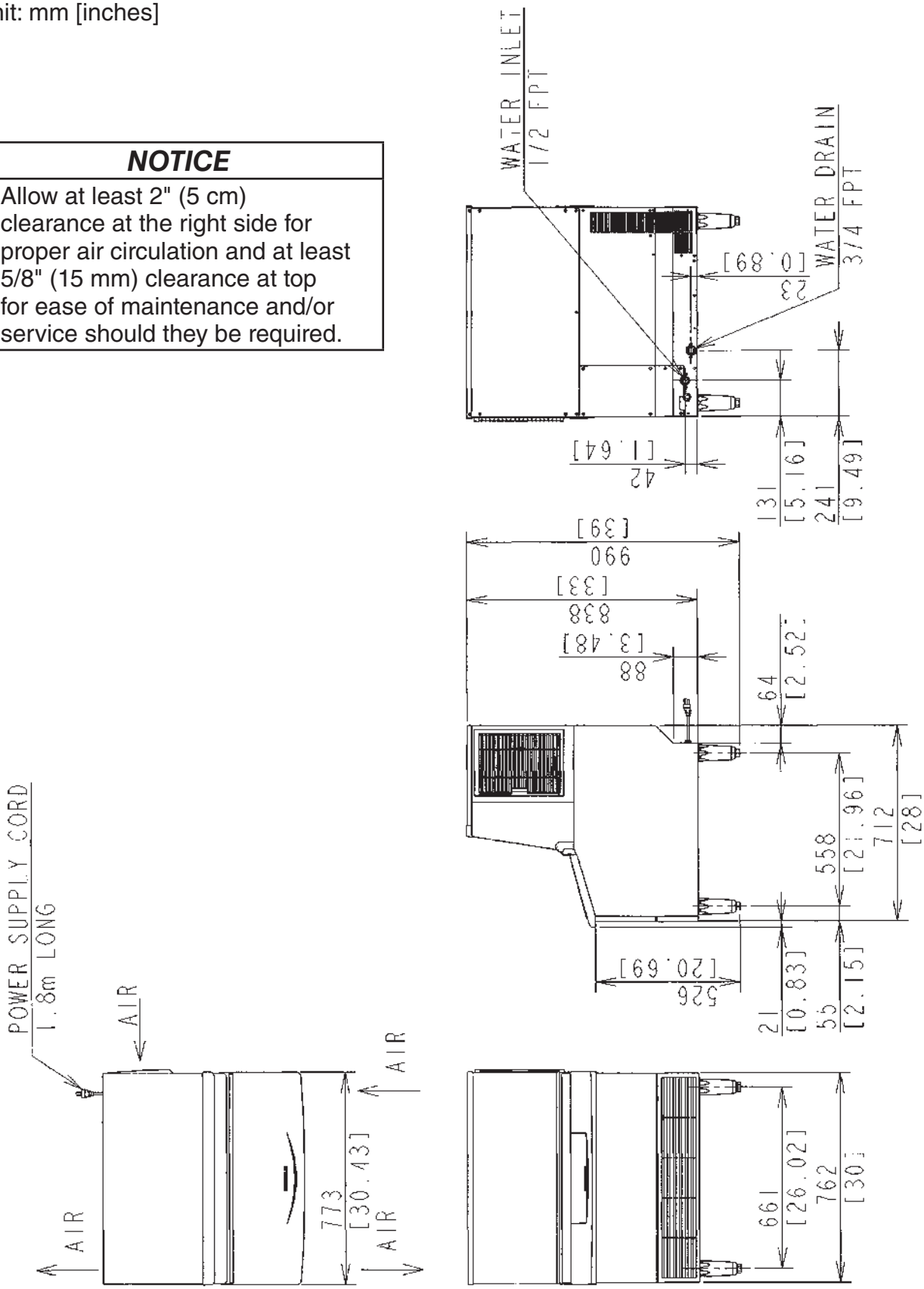

3. KM-301BWK

Unit: mm [inches]

NOTICE
Allow at least 2" (5 cm) clearance at the right side for proper air circulation and at least 5/8" (15 mm) clearance at top for ease of maintenance and/or service should they be required.

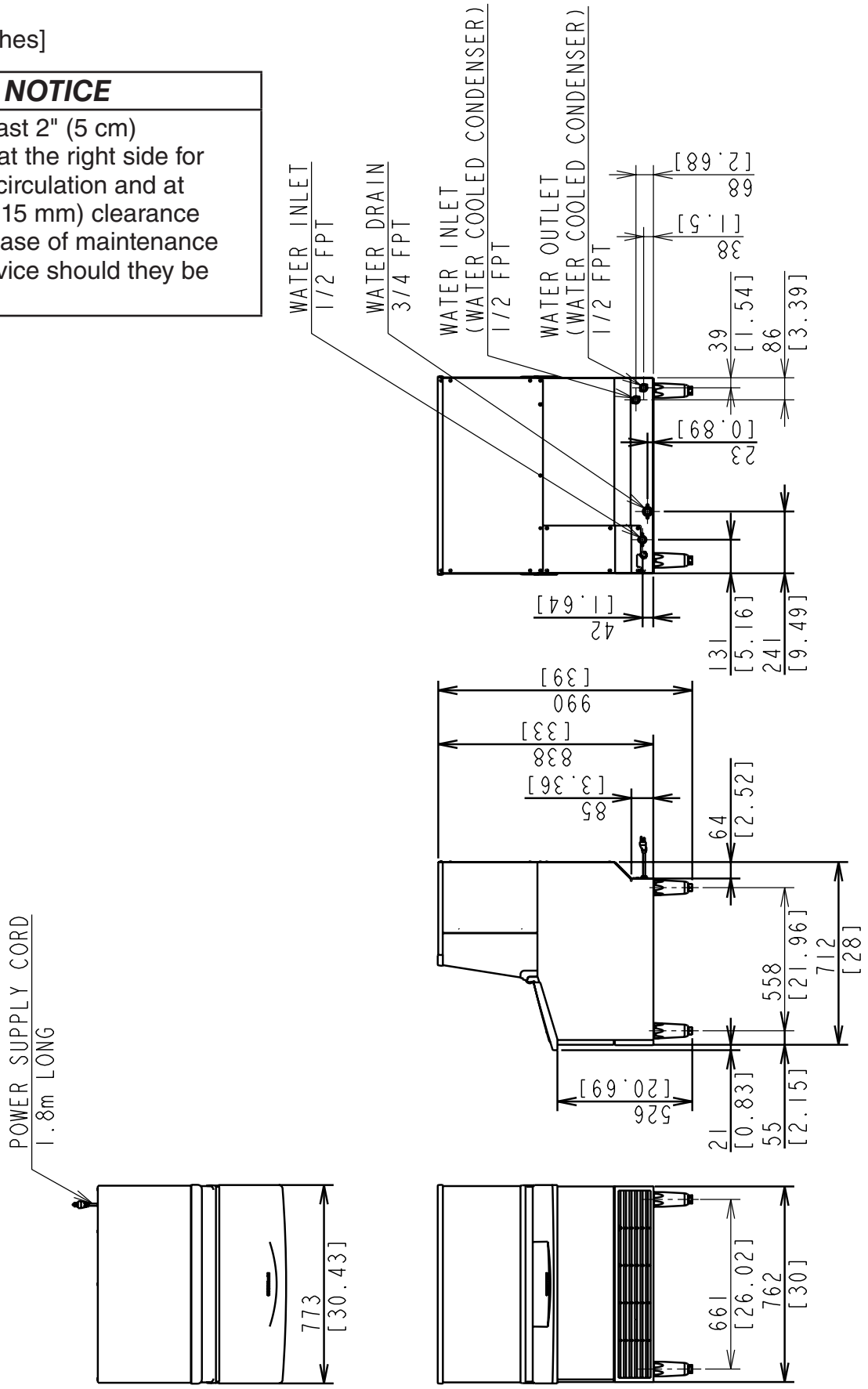

II. Installation and Operating Instructions

⚠ WARNING

- This appliance must be installed in accordance with applicable national, state, and local codes and regulations.
- This appliance to be installed in accordance with the Safety Standard for Refrigeration Systems ANSI/ASHRAE 15.
- Failure to install, operate, and maintain the appliance in accordance with this manual will adversely affect safety, performance, component life, and warranty coverage and may result in costly water damage.
- **CHOKING HAZARD:** Ensure all components, fasteners, and thumbscrews are securely in place after installation. Make sure that none have fallen into the ice storage bin.

A. Location

1. General

This appliance uses an A3 flammable refrigerant. For refrigerant charge and minimum room floor area, see the table below.

⚠ DANGER

R-290 Class A3 Flammable Refrigerant Used

Model	R-290 Refrigerant Charge g (oz.)	Minimum Room Floor Area (operating or storage) Surface Minimale De Plancher (l'exploitation ou le stockage) m² (ft²)
KM-231BAK	115 (4.1)	5.5 (59.2)
KM-301BAK	135 (4.8)	6.5 (69.5)

≥ Area m² (ft²) (see "Minimum Room Floor Area" above)
≥ Superficie m² (pi²) (voir « Surface Minimale De Plancher » ci-dessus)

⚠ DANGER continued

R-290 Refrigerant Charge:

- If greater than 114 g (4 oz.), do not install in public corridor or lobby.
- If greater than 152 g (5.3 oz.), do not install within 6 m (20 ft) of open flame.

Charge de réfrigérant R-290:

- Si elle est supérieure à 114 g (4 oz.), ne pas l'installer dans un couloir public ou un hall d'entrée.
- Si elle est supérieure à 152 g (5,3 oz.), ne pas l'installer à moins de 6 m (20 pi) d'une flamme nue.

This appliance is not intended for use above 2,000 m (6,561 ft). Installation above 2,000 m (6,561 ft) may adversely affect safety, performance, and component life.

NOTICE

- Normal operating ambient temperature must be within 45°F to 100°F (7°C to 38°C); Normal operating water temperature must be within 45°F to 90°F (7°C to 32°C). Operation of the icemaker, for extended periods, outside of these normal temperature ranges may affect icemaker performance.
- This appliance will not work at sub-freezing temperatures. To prevent damage to the water supply line, drain the icemaker if the air temperature is going to go below 32°F (0°C). See "V. Preparing the Icemaker for Periods of Non-Use."

- The appliance should not be located next to ovens, grills, or other high heat producing equipment.
- In areas where water damage is a concern, install in a contained area with a floor drain.
- Allow at least 2" (5 cm) clearance at the right side for proper air circulation and at least 5/8" (15 mm) clearance at top for ease of maintenance and/or service should they be required.
- The location must provide a firm and level foundation for the appliance.

B. Checks Before Installation

NOTICE
• Remove all shipping cartons, tape, and packing material. If any are left in the appliance, it will not work properly. • Remove the shipping tape holding the door and separator. See Fig. 1.

- Visually inspect the exterior of the shipping container and immediately report any damage to the carrier. Upon opening the container, any concealed damage should also be immediately reported to the carrier.
- Remove the package containing the accessories.
- Remove the protective plastic film from the panels. If the appliance is exposed to the sun or to heat, remove the film after the appliance cools.
- Check that refrigerant lines do not rub or touch lines or other surfaces, and that the fan blade (if applicable) turns freely.
- Check that the compressor is snug on all mounting pads.
- See the nameplate inside the bottom front of the right side panel (behind the louver), and check that your voltage supplied corresponds with the voltage specified on the nameplate.

C. How to Remove Louver
See Fig. 1

- Louver: Pull the top towards you, and lift off when the magnet catches come off the body.

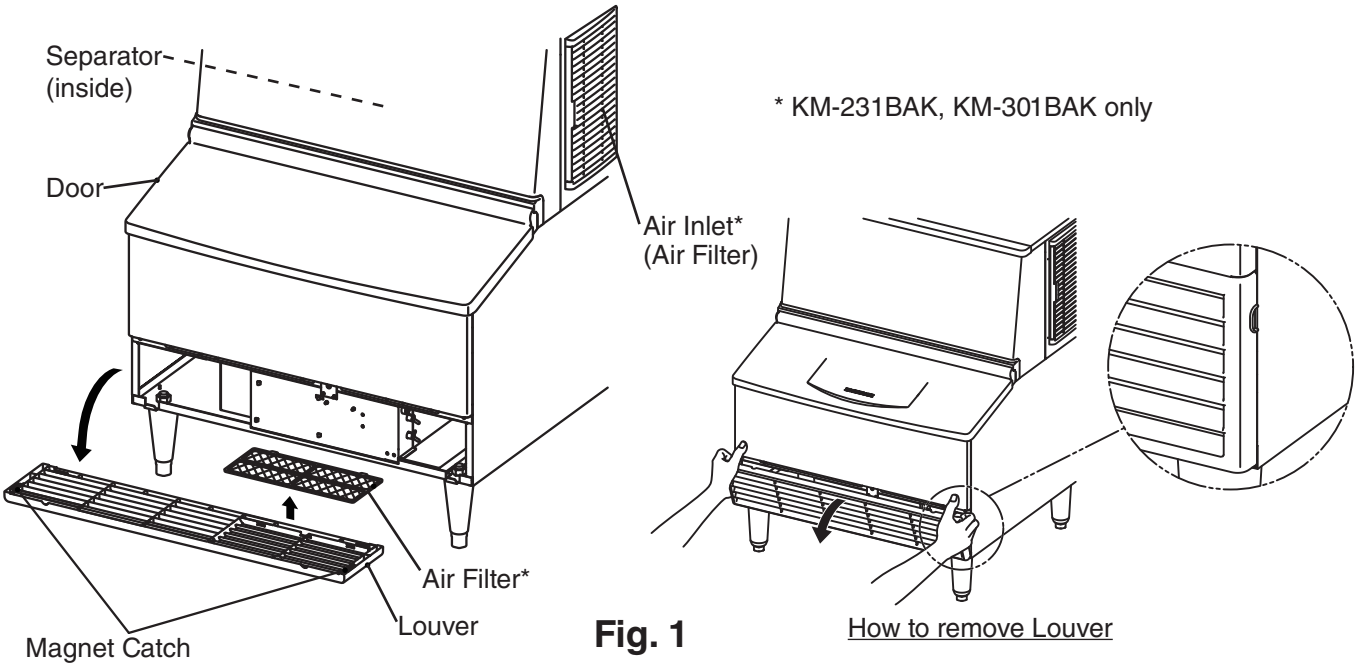

Fig. 1

D. Setup

NOTICE
• Do not place more than 33 lb. (15 kg) on the top panel. • Do not use the frame to lift the appliance. Lift the appliance from the base. • Handle the appliance carefully to avoid damaging the exterior.

1) Unpack the appliance, and remove all shipping cartons, tape, and packing material BEFORE operating the appliance.
2) Position the appliance in its permanent location.
3) Level the appliance in both the left-to-right and the front-to-rear directions (when installed with or without legs). See Fig. 2.
4) If mounting flat to a counter, seal the perimeter where the appliance contacts the counter with approved caulk compound in a smooth and easily cleanable manner.
5) If installing the unit with legs on the bottom, use the four accessory legs adjustable from 6" (15.2 cm) to 7" (17.8 cm). Screw the legs tightly into the tapped holes in the base. See Fig. 3.

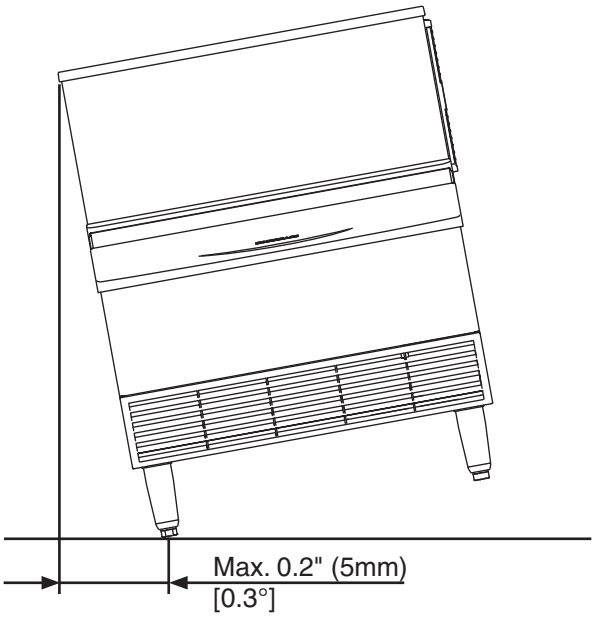

Fig. 2

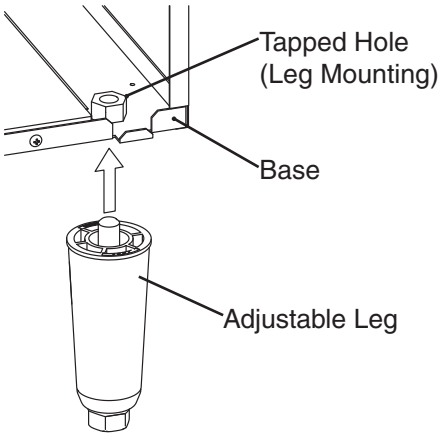

Fig. 3

E. Electrical Connection

⚠ WARNING

- Electrical connection must meet national, state, and local electrical code requirements. Failure to meet these code requirements could result in death, electric shock, serious injury, fire, or severe damage to equipment.
- This appliance requires an independent power supply of proper capacity. See the nameplate for electrical specifications. Failure to use an independent power supply of proper capacity can result in a tripped breaker, blown fuse, damage to existing wiring, or component failure. This could lead to heat generation or fire.
- **THE APPLIANCE MUST BE GROUNDED:** This appliance is equipped with a NEMA 5-15 three-prong grounding plug to reduce the risk of potential shock hazards. It must be plugged into a properly grounded, independent 3-prong wall outlet. If the outlet is a 2-prong outlet, it is your personal responsibility to have a qualified electrician replace it with a properly grounded, independent 3-prong wall outlet. Do not remove the ground prong from the power cord and do not use an adapter plug. Failure to follow these instructions may result in death, electric shock, or fire.
- Do not use an extension cord.
- To reduce the risk of electric shock, make sure the control switch is in the "OFF" position before plugging in or unplugging the appliance.
- To reduce the risk of electric shock, do not touch the control switch or plug with damp hands.
- Do not use an appliance with a damaged power cord. The power cord should not be altered, jerked, bundled, weighed down, pinched, or tangled. Such actions could result in electric shock or fire. To unplug the appliance, be sure to pull the plug, not the cord, and do not jerk the cord.
- If the supply cord is damaged, it must be replaced by the manufacturer, its service agent, or similarly qualified persons in order to avoid a hazard. Upon replacement, the GREEN ground wire in the power cord must be connected to the designated grounding screw.

- Usually an electrical permit and services of a licensed electrician are required.
- The maximum allowable voltage variation is ±10 percent of the nameplate rating.

F. Water Supply and Drain Connections
See Figs. 4 through 6

⚠ WARNING

- Water supply and drain connections must be installed in accordance with applicable national, state, and local regulations.
- Connect to potable water supply only. Do not connect to a hot-water supply.

NOTICE

- Normal operating water temperature must be within 45°F to 90°F (7°C to 32°C). Operation of the appliance, for extended periods, outside of this normal temperature range may affect appliance performance.
- Water supply pressure must be a minimum of 10 PSIG (68.9 kPa) and a maximum of 113 PSIG (779.1 kPa). If the pressure exceeds 113 PSIG (779.1 kPa), the use of a pressure reducing valve is required.
- To prevent damage to the appliance, do not operate the appliance when the water supply is off, or if the pressure is below 10 PSIG (68.9 kPa). Do not run the appliance until the proper water pressure is reached.
- External filters, strainers, or softeners may be required depending on water quality. Contact your local Hoshizaki Certified Service Representative or local Hoshizaki distributor for recommendations.
- In areas where water damage is a concern, install in a contained area with a floor drain.
- Water line installation to the appliance is not warranted by Hoshizaki.
- Water-hammer issues must be resolved by a qualified plumber before installing the appliance. Water hammer can cause appliance damage that may lead to water leakage or flooding.

- A plumbing permit and services of a licensed plumber may be required in some areas.
- Be sure there is sufficient extra water supply line and drain line for the appliance to be pulled out for service.
- Drain outlet is 1/2” FPT. A minimum of 1/2” nominal ID hard pipe or equivalent is required for the drain line. Installing a smaller diameter drain line will reduce water flow and may lead may lead to water leakage or flooding. Be sure there is sufficient extra drain line for the unit to be pulled out for service.
- The icemaker drain line and water-cooled condenser drain line (if applicable) must be run separately.
- Drain lines must have 1/4" fall per foot (2 cm per 1 m) on horizontal runs to get a good flow. A vented tee connection is also required for proper flow. Extend the vent at least 12” (30 cm) above the drain outlet.
- Drain lines should not be piped directly to the sewer system. An air gap of a minimum of 2 vertical inches (5 cm) should be between the end of the drain pipes from the icemaker and water-cooled condenser (if applicable) and the floor drain.

1. Icemaker

Icemaker Water Supply Inlet	Minimum Icemaker Water Supply Line Size	Icemaker Drain Outlet	Minimum Icemaker Drain Line Size
1/2" Female Pipe Thread (FPT)	1/4" Nominal ID Copper Water Tubing or Equivalent	3/4" Female Pipe Thread (FPT)	3/4" Nominal ID Hard Pipe or Equivalent

- A minimum of 1/4” nominal ID copper water tubing or equivalent is required for the icemaker water supply line.
- Water supply inlet is 1/2” female pipe thread (FPT).
- A water supply line shut-off valve and drain valve must be installed.
- Water supply pressure must be a minimum of 10 PSIG (68.9 kPa) and a maximum of 113 PSIG (779.1 kPa). If the pressure exceeds 113 PSIG (779.1 kPa), the use of a pressure reducing valve is required.

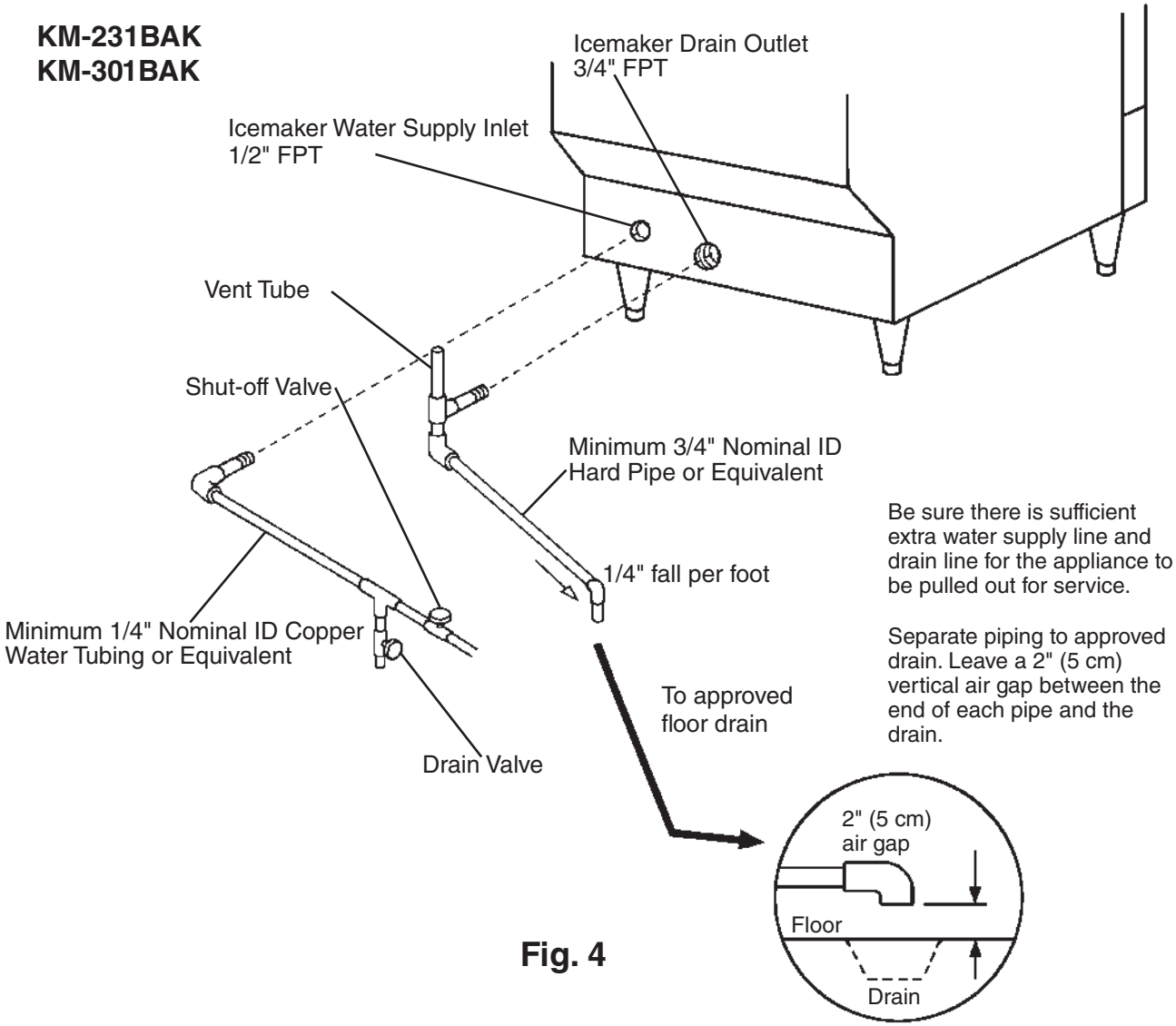

Fig. 4

2. Water-Cooled Condenser

a) Connection to an Open Drain System

Condenser Water Supply Inlet	Minimum Condenser Water Supply Line Size	Condenser Drain Outlet	Minimum Condenser Drain Line Size
1/2" Female Pipe Thread (FPT)	1/4" Nominal ID Copper Water Tubing or Equivalent	1/2" Female Pipe Thread (FPT)	1/4" Nominal ID Hard Pipe or Equivalent

- A condenser water supply line shut-off valve and drain valve must be installed.
- In some areas, a back flow preventer may be required in the cooling water circuit.
- In order to maintain the proper high side pressure, the condenser water supply inlet temperature should not drop below 45°F (7°C) and the condenser drain outlet temperature must be in the 104°F to 115°F (40°C to 46°C) range. Once the icemaker installation is complete, confirm the condenser drain outlet temperature 5 minutes after a freeze cycle starts. If the condenser drain outlet temperature is not in the proper range, use a flat blade screwdriver to rotate the adjustment screw on the water-regulating valve until the temperature is in the proper range.

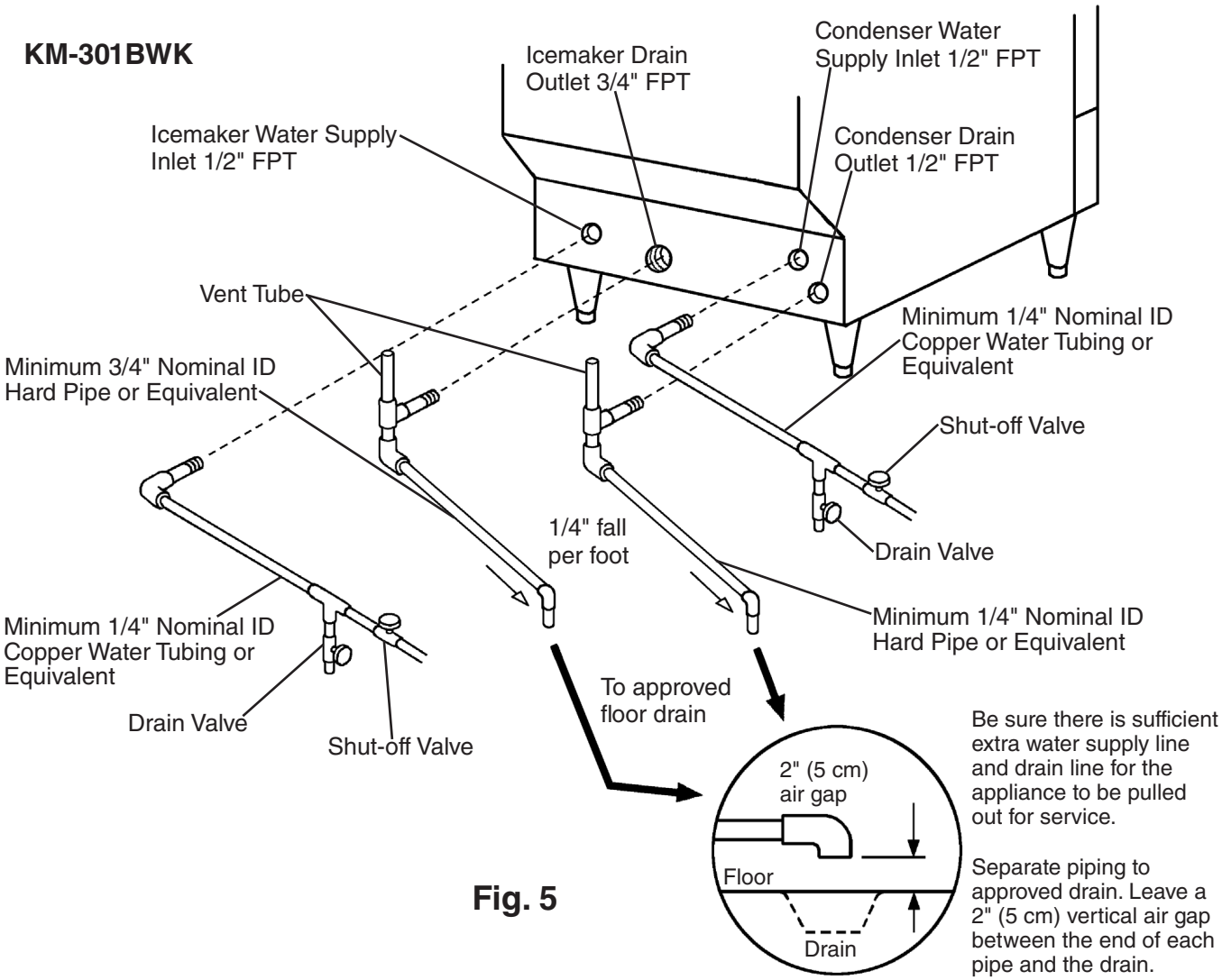

Fig. 5

b) Connection to a Closed Loop System

Condenser Water Supply Inlet	Minimum Condenser Water Supply Line Size	Condenser Return Outlet	Minimum Condenser Return Line Size
1/2" Female Pipe Thread (FPT)	1/4" Nominal ID Copper Water Tubing or Equivalent	1/2" Female Pipe Thread (FPT)	1/4" Nominal ID Copper Water Tubing or Equivalent

- Shut-off valves and drain valves must be installed at both the condenser water supply inlet and condenser return outlet.
- Minimum water flow to the condenser is 4 GPM.
- The pressure differential between the condenser water supply inlet and condenser return outlet must be no less than 10 PSIG (68.9 kPa).
- When using a glycol blend, the solution mixture should be less than 30% glycol.
- In order to maintain the proper high side pressure, the condenser water supply inlet temperature should not drop below 45°F (7°C) and the condenser drain outlet temperature must be in the 104°F to 115°F (40°C to 46°C) range. Once the icemaker installation is complete, confirm the condenser drain outlet temperature 5 minutes after a freeze cycle starts. If the condenser drain outlet temperature is not in the proper range, use a flat blade screwdriver to rotate the adjustment screw on the water-regulating valve until the temperature is in the proper range.

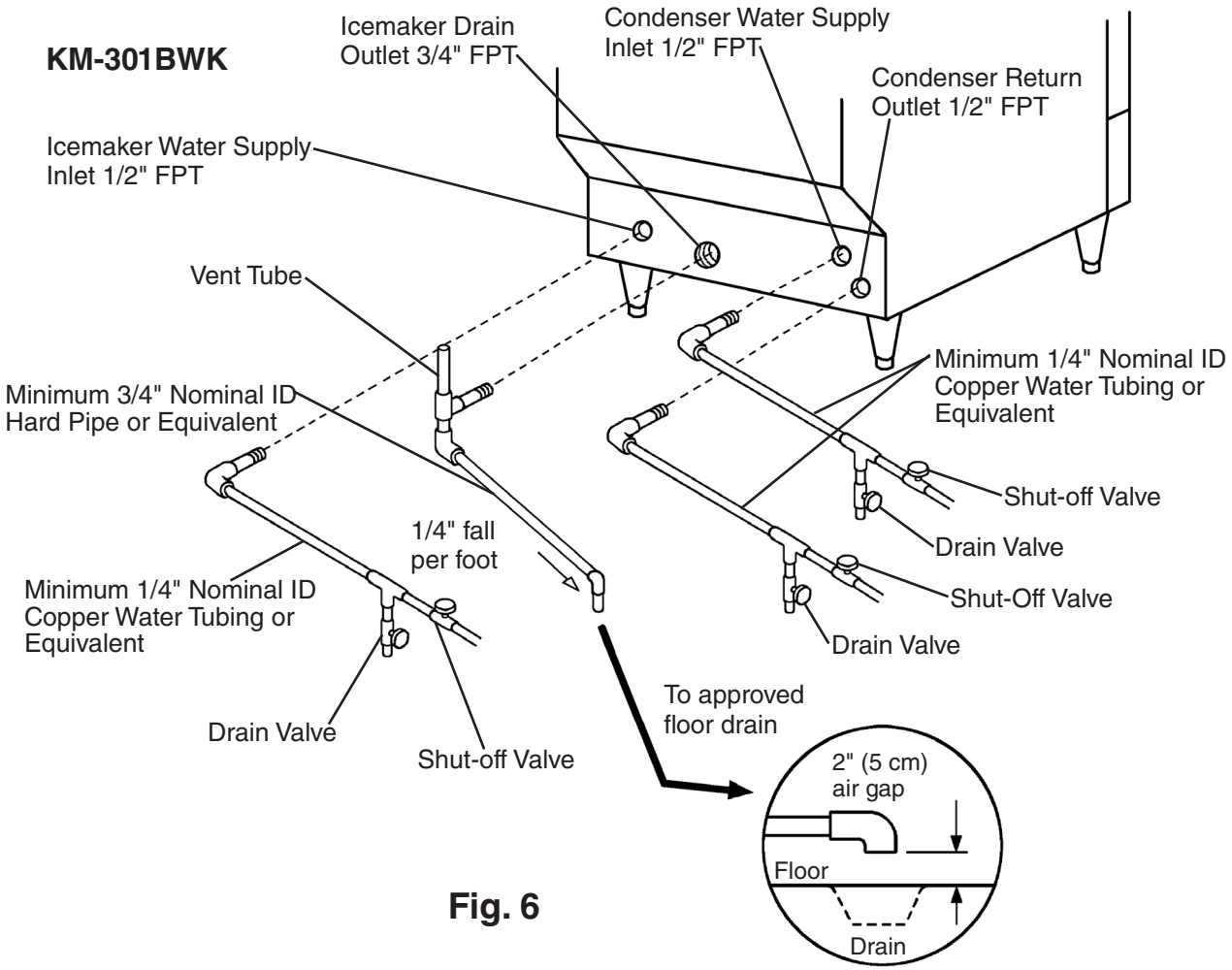

Fig. 6

G. Final Checklist

1. Pre-Startup

1) Is the appliance level?
2) Is the appliance in a site where the ambient temperature is within 45°F to 100°F (7°C to 38°C) and the water temperature within 45°F to 90°F (7°C to 32°C) all year around?
3) Is there at least 2" (5 cm) clearance at the right side and at least 5/8" (15 mm) clearance at top?
4) Have all shipping cartons, tape, and packing material been removed from the appliance? Are the cube guides in their correct positions?
5) Have all electrical and water connections been made? Do electrical and water connections meet applicable national, state, and local code and regulation requirements?
6) Has the power supply voltage been checked or tested against the nameplate rating? Is the power supply a properly grounded, independent 3-prong wall outlet?
7) Are the water supply and drain lines sized as specified? Are the water supply line shut-off valve(s) and drain valve(s) installed? Has the water supply pressure been checked to ensure a minimum of 10 PSIG (68.9 kPa) and a maximum of 113 PSIG (779.1 kPa)?
8) Are all components, fasteners, and thumbscrews securely in place?
9) Continue to "III.B. Startup."

2. Post-Startup

⚠ WARNING

CHOKING HAZARD: Ensure all components, fasteners, and thumbscrews are securely in place after installation. Make sure that none have fallen into the ice storage bin.

1) Has the bin control operation been confirmed?
2) Are all components, fasteners, and thumbscrews securely in place?
3) Has the end user been given the instruction manual, and instructed on how to operate the appliance and the importance of the recommended periodic maintenance?
4) Has the end user been given the contact information of an authorized service agent?
5) Has the warranty card been filled out and forwarded to the factory for warranty registration?

III. Operating Instructions

R-290 Class A3 Flammable Refrigerant Used

⚠ DANGER

Risk of Fire or Explosion. Flammable Refrigerant Used.

- Be sure to follow all Important Safety Information located at the beginning of this manual.
- Failure to install, operate, and maintain the appliance in accordance with this manual will adversely affect safety, performance, component life, and warranty coverage and may result is costly water damage.
- Keep clear of obstruction all ventilation openings in the appliance enclosure or in the structure for building-in.

Risque D'Incendie ou D'Explosion. Fluide Frigorigène Inflammable Utilisé.

- Veillez à respecter toutes les consignes de sécurité importantes figurant au début de ce manuel.
- Le fait de ne pas installer, utiliser et entretenir l'appareil conformément à ce manuel aura des conséquences négatives sur la sécurité, les performances, la durée de vie des composants et la couverture de la garantie, et peut entraîner des dégâts des eaux coûteux.
- Ne pas obstruer les ouvertures de ventilation dans l'enceinte de l'appareil ou dans la structure d'encastrement.

A. Important Notes About Usage

NOTICE

- Protect the floor when moving the appliance to prevent damage to the floor.
- To help ensure that the ice storage bin drain remains clear, follow the instructions in "IV.B. Cleaning and Sanitizing Instructions" once a year or as often as necessary for conditions. If the ice storage bin drain becomes clogged, water could build up in the ice storage bin and overflow, leading to costly water damage.
- If water collects in the bin and will not drain, turn off the appliance and close the water supply line shut-off valve. Call for service.
- Do not leave the appliance on during extended periods of non-use, extended absences, or in sub-freezing temperatures. To properly prepare the appliance for these occasions, follow the instructions in "V. Preparing the Appliance for Periods of Non-Use."
- Keep ventilation openings, in the appliance enclosure or in the built-in structure, clear of obstruction.
- Do not place objects on top of the appliance.
- The ice storage bin is for ice use only. Do not store anything else in the ice storage bin.

B. Startup and Bin Control Check

⚠ WARNING

- All parts are factory-adjusted. Improper adjustments may adversely affect safety, performance, component life, and warranty coverage.
- To reduce the risk of electric shock, do not touch the power switch, control switch, or plug (on corded models) with damp hands. If you have to slide the appliance back for a built-in installation, make sure you do not damage or pinch the water supply line, drain line, or power cord.

NOTICE

- If the appliance is turned off, wait for at least 3 min. before restarting the appliance to prevent damage to the compressor.
- At startup, confirm that all internal and external connections are free of leaks.

1) Open the water supply line shut-off valve(s).
2) Remove the louver.
3) Make sure the control switch is in the "OFF" position. Plug the appliance into the electrical outlet. **WARNING! To reduce the risk of electric shock, do not touch the control switch or plug with damp hands. If you have to slide the appliance back for a built-in installation, make sure you do not damage or pinch the water supply line, drain line, or power cord.**
4) Move the control switch to the "ICE" position.
5) Allow the appliance to operate for 10 minutes.
6) Move the control switch to the "SERVICE" position. Move the service switch to the "WASH" position.
7) Allow the appliance to operate for 5 minutes.
8) Move the service switch to the "DRAIN" position.
9) Allow the appliance to drain for 2 minutes.
10) Move the control switch to the "OFF" position, then unplug the appliance from the electrical outlet.
11) Open the door.
12) Clean the ice storage bin using a neutral cleaner. Rinse thoroughly after cleaning.
13) Make sure the control switch is in the "OFF" position. Plug the appliance into the electrical outlet.
14) Move the control switch to the "ICE" position.
15) Replace the louver in its correct position.

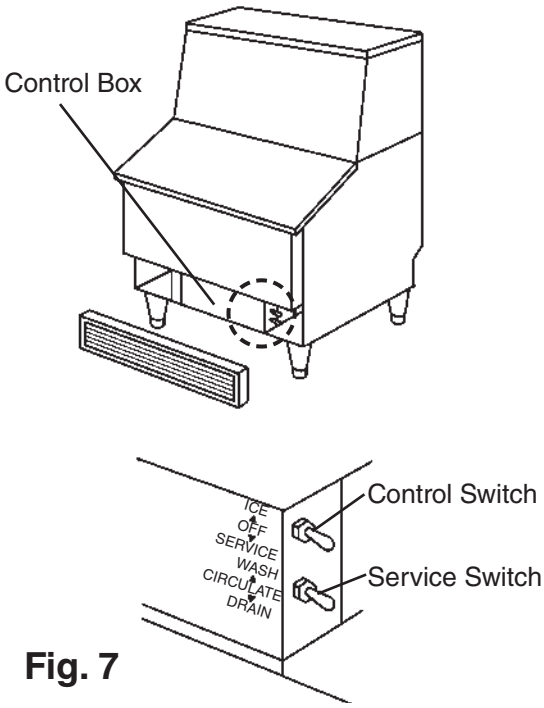

Fig. 7

16) To confirm bin control operation, press the bin control's actuator paddle during the first 5 minutes of the freeze cycle. The compressor and fan motor (if applicable) should de-energize within 15 seconds, then the drain valve should energize until the water tank empties. After the water tank empties, the pump motor and drain valve should de-energize.

17) Close the door.

18) Return to "II.G.2. Post-Startup" and complete final checklist.

IV. Maintenance

The appliance must be maintained in accordance with the instruction manual and labels provided with the appliance. Consult with your local Hoshizaki Certified Service Representative about maintenance service. To obtain the name and phone number of your local Hoshizaki Certified Service Representative, visit www.hoshizakiamerica.com.

⚠ WARNING

- Only qualified service technicians should service the appliance.
- Failure to install, operate, and maintain the appliance in accordance with this manual will adversely affect safety, performance, component life, and warranty coverage.
- To reduce the risk of electric shock, do not touch the control switch or power switch with damp hands.
- **CHOKING HAZARD:** Ensure all components, fasteners, and thumbscrews are securely in place after any maintenance is done to the appliance. Make sure that none have fallen into the ice storage bin.
- After service, make sure that there are no wires pinched between the panels and appliance. Make sure you do not damage or pinch the water supply line or drain line,

A. Maintenance Schedule

The maintenance schedule below is a guideline. More frequent maintenance may be required depending on water quality, the appliance's environment, and local sanitation regulations.

Maintenance Schedule		
Frequency	**Area**	**Task**
Daily	Scoop	Clean the ice scoop using a neutral cleaner. Rinse thoroughly after cleaning.
Bi-Weekly	Air Filters	Inspect. Wash with warm water and neutral cleaner if dirty.
Monthly	External Water Filters	Check for proper pressure and change if necessary.
	Appliance Exterior	Wipe down with a clean, soft cloth. Use a damp cloth containing a neutral cleaner to wipe off oil or dirt build up. Clean any chlorine staining (rust colored spots) using a non-abrasive cleanser.
Yearly	Appliance and Ice Storage Bin Liner	Clean and sanitize per the cleaning and sanitizing instructions provided in this manual or on the maintenance label on the icemaker.
	Water Supply Inlet	Close the icemaker water supply line shut-off valve and drain the water system. Clean the water supply inlet screen.
	Condenser	Inspect. Clean if necessary by using a brush or vacuum cleaner. More frequent cleaning may be required depending on location.
	Water Hoses	Inspect the water hoses and clean/replace if necessary.

B. Cleaning and Sanitizing Instructions

The appliance must be cleaned and sanitized at least once a year. More frequent cleaning and sanitizing may be required in some water conditions.

⚠ WARNING

- To prevent injury to individuals and damage to the appliance, do not use ammonia type cleaners.
- Carefully follow any instructions provided with the bottles of cleaning and sanitizing solution.
- Always wear liquid-proof gloves and goggles to prevent the cleaning and sanitizing solutions from coming into contact with skin or eyes.
- After cleaning and sanitizing, do not use ice made from the cleaning and sanitizing solutions. Be careful not to leave any solution on the parts or in the ice storage bin.

NOTICE

To prevent damage to the water pump, do not leave the control switch in the "SERVICE" position for extended periods of time when the water tank is empty.

1. Cleaning Procedure

1) Dilute 5 fl. oz. (148 ml) of recommended cleaner Hoshizaki "Scale Away" with 1 gallon (3.8 l) of water.
2) Remove the louver. Remove all ice from the evaporator and the ice storage bin.
   Note: To remove cubes on the evaporator, move the control switch to the "OFF" position and move it back to the "ICE" position after 3 minutes. The harvest cycle starts and the cubes will be removed from the evaporator.
3) Move the control switch to the "OFF" position.
4) Move the service switch to the "DRAIN" position, then move the control switch to the "SERVICE" position.
5) After 2 minutes, move the control switch to the "OFF" position.
6) Pour the cleaning solution into the water tank. Move the service switch to the "WASH" position, then move the control switch to the "SERVICE" position.
7) After 30 minutes, move the control switch to the "OFF" position.
8) Move the service switch to the "DRAIN" position, then move the control switch to the "SERVICE" position.
9) After 2 minutes, move the control switch to the "OFF" position.
10) Move the control switch to the "ICE" position to fill the water tank with water.
11) After 3 minutes, move the service switch to the "WASH" position, then move the control switch to the "SERVICE" position.
12) After 5 minutes, move the control switch to the "OFF" position.
13) Move the service switch to the "DRAIN" position, then move the control switch to the "SERVICE" position.

14) Repeat steps 9 through 13 three more times to rinse thoroughly.

15) After 2 minutes, move the control switch to the "OFF" position.

16) Disconnect the overflow pipe. Next, remove the water tank by removing the two thumbscrews and pulling the tank towards you slightly and pushing it down. Be careful to avoid breakage when handling the parts. See Fig. 8.

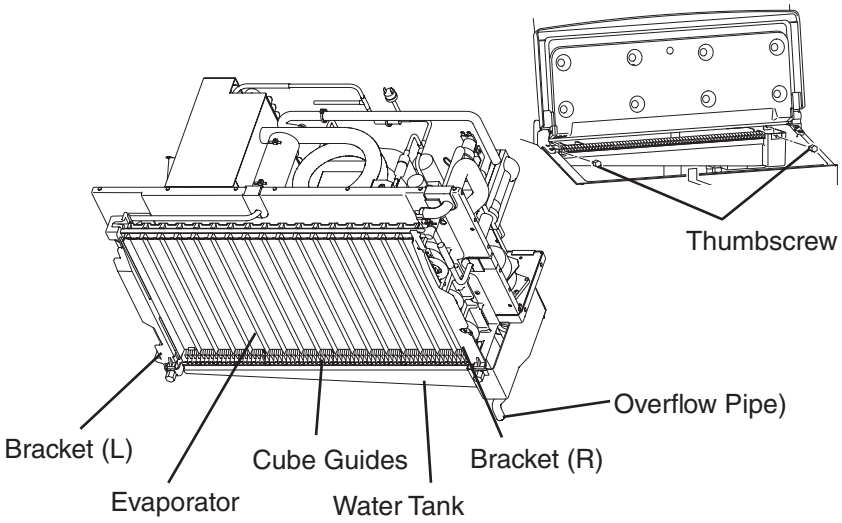

Fig. 8

17) Pull the cube guides (quantity varies depending on model) upward to remove them from the water tank. They are snapped in place. See Fig. 9.

18) Dilute 5 fl. oz. (148 ml) of recommended cleaner Hoshizaki "Scale Away" with 1 gallon (3.8 lit.) of water.

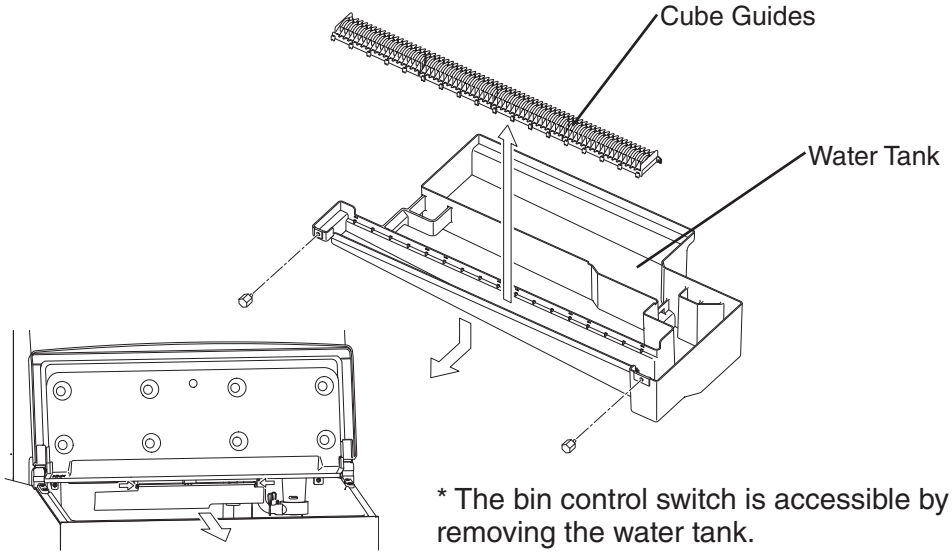

Fig. 9

19) Wash the bin control switch, water tank, float switch, cube guides, and overflow pipe by using a nylon scouring pad, brushes and the cleaning solution. See Fig. 10. In addition to the removed parts, also wash the bin liner and brackets (L) and (R) with the solution.

20) Discard the cleaning solution and rinse the parts thoroughly with water.

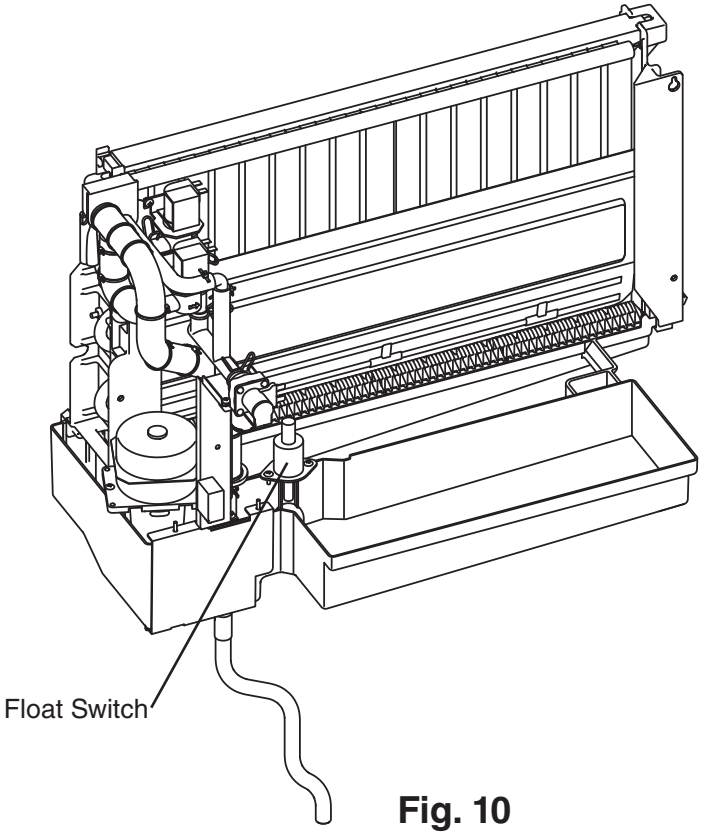

Fig. 10

2. Sanitizing Procedure - Following Cleaning Procedure

1) Dilute approximately 0.31 fl. oz. (9.2 ml) of an 8.25% sodium hypochlorite solution (chlorine bleach) with 1 gallon (3.8 lit.) of warm water. Using a chlorine test strip or other method, confirm that you have a concentration of about 200 ppm.
2) Soak the removed parts from step 19 above in a clean container containing the sanitizing solution. After allowing the parts to soak for 10 minutes, wash them with the solution. Also wash the bin liner and brackets (L) and (R) with the solution.
3) Discard the sanitizing solution and rinse the parts thoroughly with water.
4) Replace the removed parts in their correct positions in the reverse order of which they were removed.
5) Dilute approximately 0.31 fl. oz. (9.2 ml) of an 8.25% sodium hypochlorite solution (chlorine bleach) with 1 gallon (3.8 lit.) of warm water. Using a chlorine test strip or other method, confirm that you have a concentration of about 200 ppm.
6) Pour the sanitizing solution into the water tank, and allow the sanitizer to sit for 10 minutes.
7) Move the service switch to the "WASH" position, then move the control switch to the "SERVICE" position.
8) After 15 minutes, move the control switch to the "OFF" position.
9) Move the service switch to the "DRAIN" position, then move the control switch to the "SERVICE" position.
10) After 2 minutes, move the control switch to the "OFF" position.
11) Repeat steps 5 through 10 one time. Repeat steps 9 through 13 in the Cleaning Procedure three times to rinse thoroughly.
12) After 2 minutes, move the control switch to the "OFF" position.
13) Flush the ice storage bin with water.
14) Move the control switch to the "ICE" position to start the automatic icemaking process.
15) Close the door. Replace the louver in its correct position.

V. Preparing the Appliance for Periods of Non-Use

⚠ WARNING

Only qualified service technicians should service this appliance.

NOTICE

- During extended periods of non-use, extended absences, or in sub-freezing temperatures, follow the instructions below to reduce the risk of costly water damage.
- When the appliance is not used for two or three days under normal conditions, it is sufficient to move the control switch to the "OFF" position.
- To prevent damage to the water pump, do not leave the control switch in the "SERVICE" position for extended periods of time when the water tank is empty.

1. Remove the water from the icemaker water supply line:

1) Remove the louver if it has not already been removed.
2) Move the control switch to the "OFF" position.
3) Wait 3 minutes.
4) Close the icemaker water supply line shut-off valve and open the icemaker water supply line drain valve.
5) Allow the line to drain by gravity.
6) Attach compressed air or carbon dioxide supply to the icemaker water supply line drain valve.
7) Move the control switch to the "ICE" position.
8) Quickly blow the icemaker water supply line out using compressed air or carbon dioxide.

2. Drain the water tank:

1) Move the service switch to the"DRAIN" position, then move the control switch to the "SERVICE" position.
2) After 2 minutes, move the control switch to the "OFF" position. Unplug the appliance from the electrical outlet.
3) Open the door. Remove all ice from the ice storage bin and clean the ice storage bin.
4) Close the door.
5) Replace the louver in its correct position.
6) Close the icemaker water supply line drain valve.

3. On water-cooled model only, remove the water from the water-cooled condenser:

1) Make sure the control switch is in the "OFF" position and the appliance is unplugged from the electrical outlet.

2) Remove the top and left side panels.

3) Close the condenser water supply line shut-off valve. If connected to a closed loop system, also close the condenser return line shut-off valve. See Fig. 5 or 6.

4) Open the condenser water supply line drain valve. If connected to a closed loop system, also open the condenser return line drain valve.

5) Attach a compressed air or carbon dioxide supply to the condenser water supply line drain valve.

6) Open the water regulating valve by using a screwdriver to pry up on the spring retainer underneath the spring. While holding the valve open, blow out the condenser using the compressed air or carbon dioxide supply until water stops coming out.

7) Close the condenser water supply line drain valve. If connected to a closed loop system, also close the condenser return line drain valve.

8) Replace the left side and top panels in their correct positions.

VI. Decommissioning and Disposal

R-290 Class A3 Flammable Refrigerant Used

⚠ DANGER

Risk of Fire or Explosion. Flammable Refrigerant Used.

- Only qualified service technicians should install and service the appliance.
- Follow handling instructions carefully in compliance with national regulations.
- Dispose of properly in accordance with federal or local regulations.
- Do not puncture refrigerant tubing. Risk of fire or explosion due to puncture of refrigerant tubing; follow handling instructions carefully.
- Be sure to follow the full Decommissioning and Disposal information located in the Service Manual for this model. The Service Manual is available at www.hoshizakiamerica.com.

Risque D'Incendie ou D'Explosion. Fluide Frigorigène Inflammable Utilisé.

- Seuls des techniciens de service qualifiés doivent installer et entretenir l'appareil.
- Suivre attentivement les instructions de manutention conformément aux réglements nationaux.
- Mettre au rebut conformément aux conformément aux réglements fédéraux ou locaux.
- Ne pas perforer la conduite de fluide frigorigène. Risque d'incendie ou d'explosion en cas de perforation d'une canalisation de fluide frigorigène; suivez attentivement les instructions de manutention.
- Veiller à respecter l'ensemble des informations relatives à la mise hors service et à la mise au rebut figurant dans le manuel d'entretien de ce modèle. Le manuel d'entretien est disponible à l'adresse suivante: www.hoshizakiamerica.com.

HOSHIZAKI AMERICA, INC.

618 Hwy. 74 South, Peachtree City, GA 30269 USA (P) 770.487.2331 (F) 770.487.3360 hoshizakiamerica.com 1A7787-010