HOSHIZAKI

Instruction Manual

Modular Crescent Cuber

Models
KM-901MAJ, MWJ, MRJZ/3
KM-1100MAJ, MWJ, MRJZ
KM-1340MAJ, MWJ, MRJZ/3
KM-1601MRJZ/3

hoshizakiamerica.com

Issued: 7-1-2024
Revised: 7-15-2024

⚠ WARNING

Only qualified service technicians should install and service the appliance. To obtain the name and phone number of your local Hoshizaki Certified Service Representative, visit www.hoshizakiamerica.com. No installation or service should be undertaken until the technician has thoroughly read this Instruction Manual. Likewise, the owner/manager should not proceed to operate the appliance until the installer has instructed them on its proper operation. Failure to install, operate, and maintain the appliance in accordance with this manual will adversely affect safety, performance, component life, and warranty coverage and may result in costly water damage. Proper installation is the responsibility of the installer. Product failure or property damage due to improper installation is not covered under warranty.

Hoshizaki provides this manual primarily to assist qualified service technicians in the installation, maintenance, and service of the appliance.

Should the reader have any questions or concerns which have not been satisfactorily addressed, please call, send an e-mail message, or write to the Hoshizaki Technical Support Department for assistance.

Phone: 1-800-233-1940; (770) 487-2331
Fax: 1-800-843-1056; (770) 487-3360

E-mail: techsupport@hoshizaki.com

HOSHIZAKI AMERICA, INC.
618 Highway 74 South
Peachtree City, GA 30269
Attn: Hoshizaki Technical Support Department

NOTE: To expedite assistance, all correspondence/communication MUST include the following information:

- Model Number _____
- Serial Number _____
- Complete and detailed explanation of the problem.

IMPORTANT
This manual should be read carefully before the appliance is installed and operated. Read the warnings and guidelines contained in this manual carefully as they provide essential information for the continued safe use and maintenance of the appliance. Retain this manual for any further reference that may be necessary.

CONTENTS

Important Safety Information 4
I. Specifications 6
A. Electrical and Refrigerant Data 6
1. KM-901M_J(Z)/3 6
2. KM-1100M_J(Z) 7
3. KM-1340M_J(Z)/3 8
4. KM-1601MRJZ/3 9
B. Dimensions/Connections 10
1. Air-Cooled Models (MAJ) 10
2. Water-Cooled Models (MWJ) 11
3. Remote Models (MRJZ/3) 12
4. Remote Condenser Unit URC-14FZ 13
5. Remote Condenser Unit URC-22FZ 13
II. Installation and Operating Instructions 14
A. Location 14
B. Checks Before Installation 14
C. How to Remove Panels 15
D. Setup 16
E. Electrical Connection 17
F. Water Supply and Drain Connections 19
1. Icemaker 20
2. Water-Cooled Condenser 21
G. Installation of Remote Condenser Unit 23
1. Location 23
2. Checks Before Installation 24
3. Setup 24
4. Line Set Size and Refrigerant Charge 24
5. Line Set Installation 25
6. Electrical Connection 27
7. Stacking Remote Condenser Unit 28
H. Final Checklist 29
1. Pre-Startup 29
2. Post-Startup 30
I. Startup 31
1. Bin Control Setting 31
2. Appliance Startup and Bin Control Check 34
III. Maintenance 37
A. Maintenance Schedule 37
B. Cleaning and Sanitizing Instructions 38
IV. Preparing the Appliance for Periods of Non-Use 40
V. Disposal 42

Important Safety Information

Throughout this manual, notices appear to bring your attention to situations which could result in death, serious injury, damage to the appliance, or damage to property.

⚠ WARNING **Indicates a hazardous situation which could result in death or serious injury.**

NOTICE **Indicates a situation which could result in damage to the appliance or property.**

IMPORTANT **Indicates important information about the installation, use, and care of the appliance.**

⚠ WARNING

The appliance should be destined only to the use for which it has been expressly conceived. Any other use should be considered improper and therefore dangerous. The manufacturer cannot be held responsible for injury or damage resulting from improper, incorrect, and unreasonable use. Failure to install, operate, and maintain the appliance in accordance with this manual will adversely affect safety, performance, component life, and warranty coverage and may result in costly water damage.

To reduce the risk of death, electric shock, serious injury, or fire, follow basic precautions including the following:

- Only qualified service technicians should install and service the appliance.
- The appliance must be installed in accordance with applicable national, state, and local codes and regulations.
- Electrical connection must be hard-wired and must meet national, state, and local electrical code requirements. Failure to meet these code requirements could result in death, electric shock, serious injury, fire, or damage.
- The icemaker requires an independent power supply of proper capacity. See the nameplate for electrical specifications. Failure to use an independent power supply of proper capacity can result in a tripped breaker, blown fuse, damage to existing wiring, or component failure. This could lead to heat generation or fire.
- **THE ICEMAKER MUST BE GROUNDED.** Failure to properly ground the icemaker could result in death or serious injury.
- To reduce the risk of electric shock, do not touch the control switch with damp hands.
- Move the control switch to the "OFF" position and turn off the power supply before servicing. Lockout/Tagout to prevent the power supply from being turned back on inadvertently.
- Do not make any alterations to the appliance. Alterations could result in electric shock, serious injury, fire, or damage.
- The appliance is not intended for use by persons (including children) with reduced physical, sensory, or mental capabilities, or lack of experience and knowledge, unless they have been given supervision or instruction concerning use of the appliance by a person responsible for their safety.

⚠ WARNING, continued

- Children should be properly supervised around the appliance.
- Do not climb, stand, or hang on the appliance or allow children or animals to do so. Serious injury could occur or the appliance could be damaged.
- Do not use combustible spray or place volatile or flammable substances near the appliance. They might catch fire.
- Keep the area around the appliance clean. Dirt, dust, or insects in the appliance could cause harm to individuals or damage to the appliance.

Additional Warning for Remote Models

- **THE REMOTE CONDENSER UNIT MUST BE GROUNDED.** The power supply and ground connection to the remote condenser unit are supplied from the icemaker. Failure to properly ground the remote condenser unit could result in death or serious injury.
- Wire routing (conduit) and disconnect (if required) must meet national, state, and local electrical code requirements. Failure to meet these code requirements could result in death, electric shock, serious injury, fire, or damage.

NOTICE

- Follow the water supply, drain connection, and maintenance instructions carefully to reduce the risk of costly water damage.
- In areas where water damage is a concern, install in a contained area with a floor drain.
- Install the icemaker in a location that stays above freezing. Normal operating ambient temperature must be within 45°F to 100°F (7°C to 38°C).
- Do not leave the icemaker on during extended periods of non-use, extended absences, or in sub-freezing temperatures. To properly prepare the icemaker for these occasions, follow the instructions in "IV. Preparing the Appliance for Periods of Non-Use."
- Do not place objects on top of the appliance.
- The dispenser unit/ice storage bin is for ice use only. Do not store anything else in the dispenser unit/ice storage bin.

I. Specifications

A. Electrical and Refrigerant Data

The rating label and nameplate provide electrical and refrigerant data. The rating label can be seen by removing the front panel. The nameplate is located on the rear panel. For certification marks, see the nameplate.
We reserve the right to make changes in specifications and design without prior notice.

1. KM-901M_J(Z)/3

Single Phase			
Model Number	**KM-901MAJ**	**KM-901MWJ**	**KM-901MRJZ**
AC Supply Voltage	208-230/60/1	208-230/60/1	208-230/60/1
Compressor	208-230V 9.3RLA 46LRA	208-230V 7.7RLA 46LRA	208-230V 7.7RLA 46LRA
Pump	120V 1.2FLA 60W	120V 1.2FLA 60W	120V 1.2FLA 60W
Fan	115V 1.0A 1/15HP (EACH)	--- --- ---	120V 3A MAX (Fan in URC)
Other	115-120V 0.3A	115-120V 0.3A	115-120V 0.3A
Maximum Fuse Size	20 AMPS	20 AMPS	20 AMPS
Max. HACR Breaker (USA Only)	20 AMPS	20 AMPS	20 AMPS
Max. Circuit Breaker (Canada Only)	20 AMPS	20 AMPS	20 AMPS
Minimum Circuit Ampacity	20 AMPS	20 AMPS	20 AMPS
Design Pressure	HI-467PSI LO-230PSI	HI-427PSI LO-230PSI	HI-467PSI LO-230PSI
Refrigerant	404A 3 LB. 4.9 OZ.	404A 1 LB. 14 OZ.	404A Total Refrigerant Charge with Hoshizaki Remote Condenser Unit URC-14FZ: 12 LB. 5.5 OZ.

Three Phase	
Model Number	**KM-901MRJZ3**
AC Supply Voltage	208-230/60/3
Compressor	208-230V 5.5RLA 36LRA
Pump	120V 1.2FLA 60W
Fan	120V 3A MAX (Fan in URC)
Other	115-120V 0.3A
Maximum Fuse Size	20 AMPS
Max. HACR Breaker (USA Only)	20 AMPS
Max. Circuit Breaker (Canada Only)	20 AMPS
Minimum Circuit Ampacity	20 AMPS
Design Pressure	HI-467PSI LO-230PSI
Refrigerant	404A Total Refrigerant Charge with Hoshizaki Remote Condenser Unit URC-14FZ: 12 LB. 5.5 OZ.

2. KM-1100M_J(Z)

Single Phase			
Model Number	**KM-1100MAJ**	**KM-1100MWJ**	**KM-1100MRJZ**
AC Supply Voltage	208-230/60/1	208-230/60/1	208-230/60/1
Compressor	208-230V 8.0RLA 56LRA	208-230V 8.0RLA 56LRA	208-230V 8.0RLA 56LRA
Pump	120V 1.2FLA 60W	120V 1.2FLA 60W	120V 1.2FLA 60W
Fan	115V 1.0A 1/15HP (EACH)	--- --- ---	120V 3A MAX (Fans in URC)
Other	115-120V 0.3A	115-120V 0.3A	115-120V 0.3A
Maximum Fuse Size	20 AMPS	20 AMPS	20 AMPS
Max. HACR Breaker (USA Only)	20 AMPS	20 AMPS	20 AMPS
Max. Circuit Breaker (Canada Only)	20 AMPS	20 AMPS	20 AMPS
Minimum Circuit Ampacity	20 AMPS	20 AMPS	20 AMPS
Design Pressure	HI-467PSI LO-230PSI	HI-427PSI LO-230PSI	HI-467PSI LO-230PSI
Refrigerant	404A 3 LB. 1.4 OZ.	404A 1 LB. 10.5 OZ.	404A Total Refrigerant Charge with Hoshizaki Remote Condenser Unit URC-14FZ: 9 LB. 11.2 OZ.

3. KM-1340M_J(Z)/3

Single Phase			
Model Number	**KM-1340MAJ**	**KM-1340MWJ**	**KM-1340MRJZ**
AC Supply Voltage	208-230/60/1 (3 Wire with Neutral)	208-230/60/1 (3 Wire with Neutral)	208-230/60/1 (3 Wire with Neutral)
Compressor	208-230V 9.8RLA 56LRA	208-230V 9.5RLA 56LRA	208-230V 9.5RLA 56LRA
Pump	120V 1.2FLA 60W	120V 1.2FLA 60W	120V 1.2FLA 60W
Fan	115V 1.0FLA 1/15HP (EACH)	--- --- ---	120V 3A MAX (Fans in URC)
Other	115-120V 0.3A	115-120V 0.3A	115-120V 0.3A
Maximum Fuse Size	20 AMPS	20 AMPS	20 AMPS
Max. HACR Breaker (USA Only)	20 AMPS	20 AMPS	20 AMPS
Max. Circuit Breaker (Canada Only)	20 AMPS	20 AMPS	20 AMPS
Minimum Circuit Ampacity	20 AMPS	20 AMPS	20 AMPS
Design Pressure	HI-467PSI LO-250PSI	HI-427PSI LO-250PSI	HI-467PSI LO-250PSI
Refrigerant	404A 4 LB. 10 OZ.	404A 2 LB. 1.5 OZ.	404A Total Refrigerant Charge with Hoshizaki Remote Condenser Unit URC-14FZ: 11 LB.

Three Phase	
Model Number	**KM-1340MRJZ3**
AC Supply Voltage	208-230/60/3
Compressor	208-230V 8RLA 51LRA
Pump	120V 1.2FLA 60W
Fan	120V 3A MAX (Fans in URC
Other	115-120V 0.3A
Maximum Fuse Size	20 AMPS
Max. HACR Breaker (USA Only)	20 AMPS
Max. Circuit Breaker (Canada Only)	20 AMPS
Minimum Circuit Ampacity	20 AMPS
Design Pressure	HI-467PSI LO-250PSI
Refrigerant	404A Total Refrigerant Charge with Hoshizaki Remote Condenser Unit URC-14FZ: 11 LB.

4. KM-1601MRJZ/3

Single Phase	
Model Number	**KM-1601MRJZ**
AC Supply Voltage	208-230/60/1 (3 Wire with Neutral)
Compressor	230V 11.6RLA 82LRA
Pump	120V 1.2FLA 60W
Fan	1150V 3A MAX (Fans in URC)
Other	115V 0.3A
Maximum Fuse Size	20 AMPS
Max. HACR Breaker (USA Only)	20 AMPS
Max. Circuit Breaker (Canada Only)	20 AMPS
Minimum Circuit Ampacity	20 AMPS
Design Pressure	HI-467PSI LO-230PSI
Refrigerant	404A Total Refrigerant Charge with Hoshizaki Remote Condenser Unit URC-22FZ: 15 LB. 14 OZ.

Three Phase	
Model Number	**KM-1601MRJZ3**
AC Supply Voltage	208-230/60/3
Compressor	230V 8.4RLA 65.5LRA
Pump	120V 1.2FLA 60W
Fan	115V 3A MAX (Fans in URC)
Other	115V 0.3A
Maximum Fuse Size	20 AMPS
Max. HACR Breaker (USA Only)	20 AMPS
Max. Circuit Breaker (Canada Only)	20 AMPS
Minimum Circuit Ampacity	20 AMPS
Design Pressure	HI-467PSI LO-230PSI
Refrigerant	404A Total Refrigerant Charge with Hoshizaki Remote Condenser Unit URC-22FZ: 15 LB. 14 OZ.

B. Dimensions/Connections

1. Air-Cooled Models (MAJ)

Units: mm [in.]

Side

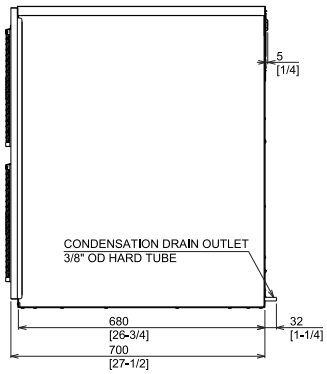

Model Shown: KM-1100MAJ

Rear

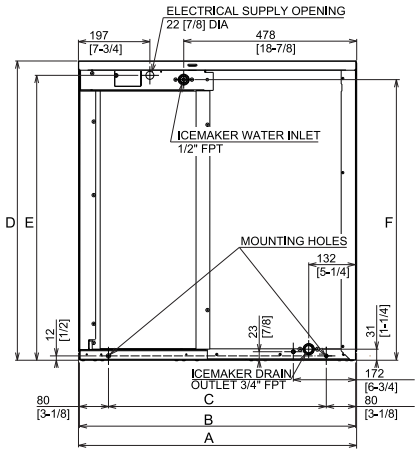

Model Shown: KM-1100MAJ

	KM-901MAJ KM-1100MAJ	KM-1340MAJ
A	768 [30-1/4]	768 [30-1/4]
B	762 [30]	762 [30]
C	602 [23-3/4]	602 [23-3/4]
D	827 [32-1/2]	1055 [41-1/2]
E	786 [31]	984 [38-3/4]
F	775 [30-1/2]	984 [38-3/4]

Bottom

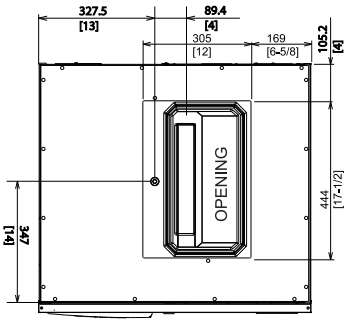

Model Shown: KM-1100MAJ

NOTICE

- KM-901MAJ_KM-1100MAJ: Allow 12" (30 cm) clearance at rear, sides, and top for proper air circulation and ease of maintenance and/or service should they be required.
  KM-1340MAJ: Allow 6" (15 cm) clearance at rear, sides, and top for proper air circulation and ease of maintenance and/or service should they be required.
- The ice storage bin opening must match the bottom opening as in the illustration.

2. Water-Cooled Models (MWJ)

Side

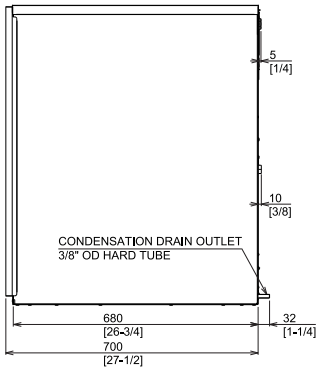

Model Shown: KM-1100MWJ

Rear

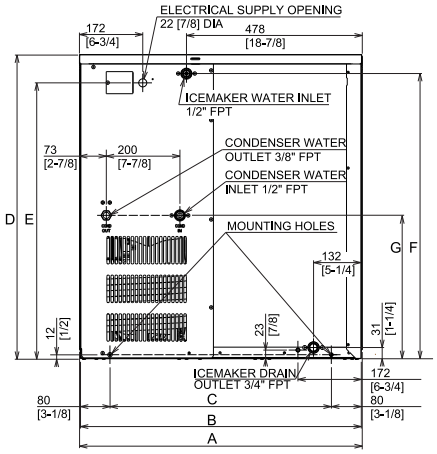

Model Shown: KM-1100MWJ

	KM-901MWJ KM-1100MWJ	KM-1340MWJ
A	768 [30-1/4]	768 [30-1/4]
B	762 [30]	762 [30]
C	602 [23-3/4]	602 [23-3/4]
D	827 [32-1/2]	1055 [41-1/2]
E	750 [29-1/2]	695 [27-3/8]
F	775 [30-1/2]	984 [38-3/4]
G	390 [15-3/8]	387 [15-1/4]

Bottom

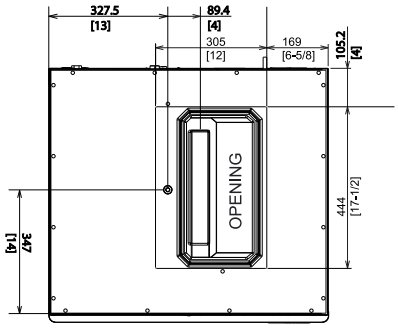

Model Shown: KM-1100MWJ

NOTICE

- KM-901MWJ_KM-1100MWJ: Allow 12" (30 cm) clearance at rear, sides, and top for proper air circulation and ease of maintenance and/or service should they be required.
  KM-1340MWJ: Allow 6" (15 cm) clearance at rear, sides, and top for proper air circulation and ease of maintenance and/or service should they be required.
- The ice storage bin opening must match the bottom opening as in the illustration.

3. Remote Models (MRJZ/3)

Units: mm [in.]

Side

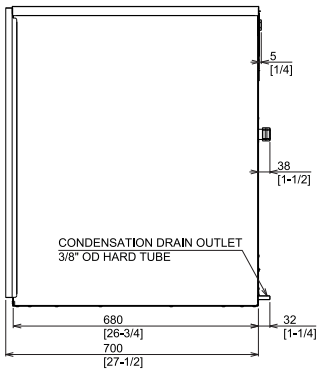

Model Shown: KM-1100MRJZ

Rear

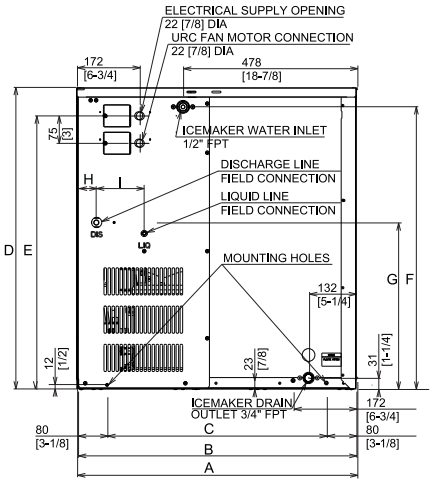

Model Shown: KM-1100MRJZ

Bottom

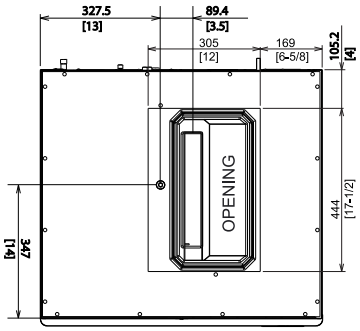

Model Shown: KM-1100MRJZ

	KM-901MRJZ/3 KM-1100MRJZ	KM-1340MRJZ/3 KM-1601MRJZ/3
A	768 [30-1/4]	768 [30-1/4]
B	762 [30]	762 [30]
C	602 [23-3/4]	602 [23-3/4]
D	827 [32-1/2]	1055 [41-1/2]
E	750 [29-1/2]	975 [38-3/8]
F	775 [30-1/2]	984 [38-3/4]
G	454.2 [17-7/8]	454.1 [17-7/8]
H	53.7 [2]	411.5 [16-1/4]
I	130.5 [5]	80.2 [3-1/8]
J	147.5 [5-3/4]	196 [7-3/4]
K	49.1 [1-7/8]	43 [1-3/4]

NOTICE

- KM-901MRJZ/3_KM-1100MRJZ: Allow 12" (30 cm) clearance at rear, sides, and top for proper air circulation and ease of maintenance and/or service should they be required. KM-1340MRJZ/3_1601MRJZ/3: Allow 6" (15 cm) clearance at rear, sides, and top for proper air circulation and ease of maintenance and/or service should they be required.
- The ice storage bin opening must match the bottom opening as in the illustration.

4. Remote Condenser Unit URC-14FZ

(use with KM-901MRJZ/3, KM-1100MRJZ, and KM-1340MRJZ/3)

Units: mm [in.]

NOTICE
Allow 24" (61 cm) clearance at front and rear for proper air circulation and ease of maintenance and/or service should they be required.

Top

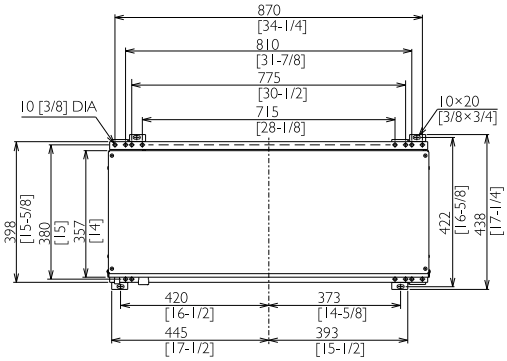

Icemaker Model	URC-14FZ Heat of Rejection AT 90°F (32°C) WT 70°F (21°C)
KM-901MRJZ	12,500 BTU/hr
KM-901MRJZ3	12,000 BTU/hr
KM-1100MRJZ	15,600 BTU/hr
KM-1340MRJZ	19,900 BTU/hr
KM-1340MRJZ3	18,000 BTU/hr

Rear

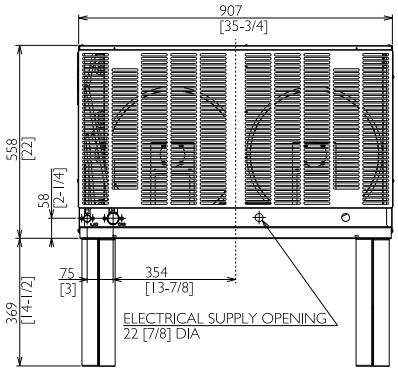

5. Remote Condenser Unit URC-22FZ

(use with KM-1601MRJZ/3)

Units: mm [in.]

NOTICE
Allow 24" (61 cm) clearance at front and rear for proper air circulation and ease of maintenance and/or service should they be required.

Top

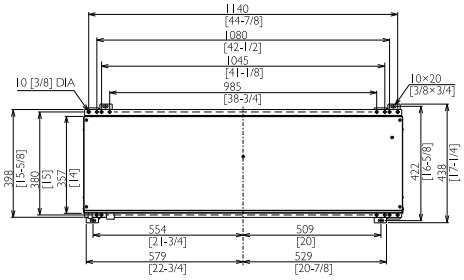

Icemaker Model	URC-22FZ Heat of Rejection AT 90°F (32°C) WT 70°F (21°C)
KM-1601MRJZ	27,300 BTU/hr
KM-1601MRJZ3	23,300 BTU/hr

Rear

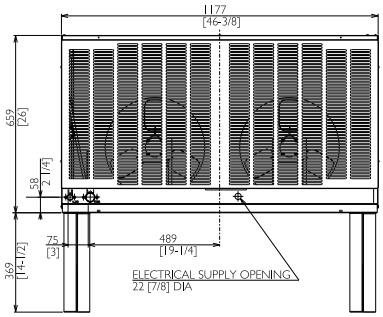

II. Installation and Operating Instructions

⚠ WARNING

- The appliance must be installed in accordance with applicable national, state, and local codes and regulations.
- Failure to install, operate, and maintain the appliance in accordance with this manual will adversely affect safety, performance, component life, and warranty coverage and may result in costly water damage.
- **CHOKING HAZARD:** Ensure all components, fasteners, and thumbscrews are securely in place after installation. Make sure that none have fallen into the dispenser unit/ice storage bin.

A. Location

NOTICE

- The icemaker is not intended for outdoor use. Normal operating ambient temperature must be within 45°F to 100°F (7°C to 38°C); Normal operating water temperature must be within 45°F to 90°F (7°C to 32°C). Operation of the icemaker, for extended periods, outside of these normal temperature ranges may affect icemaker performance.
- The icemaker will not work at sub-freezing temperatures. To prevent damage to the water supply line, drain the icemaker if the air temperature is going to go below 32°F (0°C). See "IV. Preparing the Appliance for Periods of Non-Use."

- The icemaker should not be located next to ovens, grills, or other high heat producing equipment.
- For KM-901M_J(Z)/3_KM-1100M_J(Z) models, allow 12" (30 cm) clearance at rear, sides, and top for proper air circulation and ease of maintenance and/or service should they be required.
  For KM-1340M_J(Z)/3 and KM-1601MRJZ/3 models, allow 6" (15 cm) clearance at rear, sides, and top for proper air circulation and ease of maintenance and/or service should they be required.
- The location should provide a firm and level foundation for the appliance.

B. Checks Before Installation

- Visually inspect the exterior of the shipping container and immediately report any damage to the carrier. Upon opening the container, any concealed damage should also be immediately reported to the carrier.
- Remove the shipping carton, tape, and packing material. If any are left in the appliance, it will not work properly.
- See the nameplate on the rear panel, and check that your voltage supplied corresponds with the voltage specified on the nameplate.
- Remove the panels to prevent damage when installing the appliance. See "II.C. How to Remove Panels."

- Remove the package containing the accessories.
- Remove the protective plastic film from the panels. If the appliance is exposed to the sun or to heat, remove the film after the appliance cools.
- Check that the refrigerant lines do not rub or touch lines or other surfaces, and that the fan blade (if applicable) turns freely.
- Check that the compressor is snug on all mounting pads.
- The icemaker can be installed on a dispenser unit or ice storage bin. The ice storage bins listed below are recommended.

Model Number	Bin Width	Recommended Hoshizaki Ice Storage Bin
KM-901M_J(Z)/3 KM-1100M_J(Z) KM-1340M_J(Z)/3 KM-1601MRJZ/3	30" or Wider	B-500 Series

For further options, contact your local Hoshizaki distributor.

- ***NOTICE!*** **Remote models must be connected to an appropriate remote condenser unit. The remote condenser units listed below are recommended. Connection to a different remote condenser unit will void the warranty unless Hoshizaki approves a different remote condenser unit for your specific application. For further details, contact your local Hoshizaki distributor.**

Model Number	Recommended Hoshizaki Remote Condenser Unit
KM-901MRJZ/3 KM-1100MRJZ KM-1340MRJZ/3	URC-14FZ
KM-1601MRJZ/3	URC-22FZ

C. How to Remove Panels
See Fig. 1

- Front Panel: Remove the screw. Lift up and pull towards you.
- Top Panel: Lift up at front slightly, push rearward and lift off.
- Right Side Panel: Remove the screw. Slide forward slightly and lift off.
- Insulation Panel: Lift up slightly, and pull towards you.

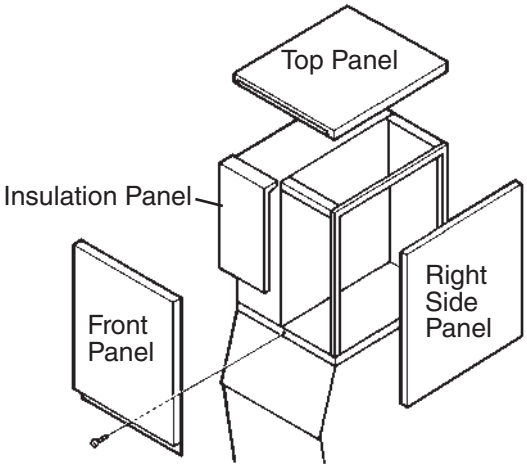

Fig. 1

D. Setup

1. Dispenser Unit/Ice Storage Bin and Icemaker Setup

⚠ WARNING

The installer must ensure the dispenser unit/ice storage bin is compatible with the icemaker, and the dispenser unit/ice storage bin and icemaker are properly attached and secured.

1a) **Dispenser Unit:** Follow the dispenser unit's setup procedure.

1b) **Ice Storage Bin:** Unpack the ice storage bin and attach the 4 adjustable legs provided (bin accessory) to the bottom of the ice storage bin.

2) Position the dispenser unit/ice storage bin in its permanent location.

3) If required, install an adapter kit or top kit. Contact your local Hoshizaki distributor for recommendations.

4) Level the dispenser unit/ice storage bin in both the left-to-right and front-to-rear directions. If using an ice storage bin, adjust the ice storage bin legs to level.

5) Place the icemaker on top of the dispenser unit/ice storage bin.

6a) **Dispenser Unit:** Follow the dispenser unit, adapter kit, or top kit instructions for securing the icemaker. If no instructions are available, secure the icemaker using the mounting brackets provided. Rotate the mounting brackets so that they fit flush to the dispenser unit. See Fig. 2a. Secure the mounting brackets to the icemaker with the bolts provided. Secure the mounting brackets to the dispenser unit with self-tapping screws (not provided). ***NOTICE!*** **Use care to avoid damage to dispenser unit components when attaching the mounting brackets.**

6b) **Ice Storage Bin:** Follow the ice storage bin, adapter kit, or top kit instructions for securing the icemaker. If no instructions are available, secure the icemaker using the 2 mounting brackets and the bolts provided. See Fig. 2b.

Fig. 2a

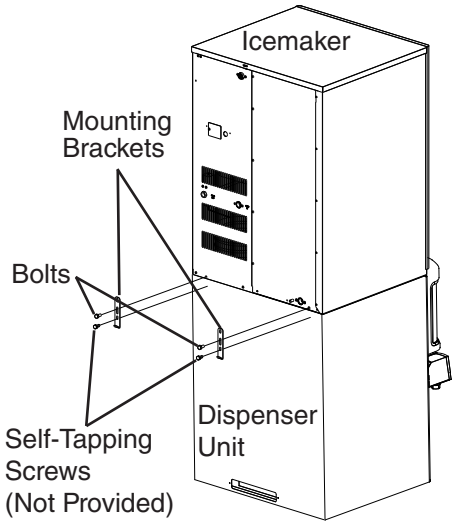

Fig. 2b

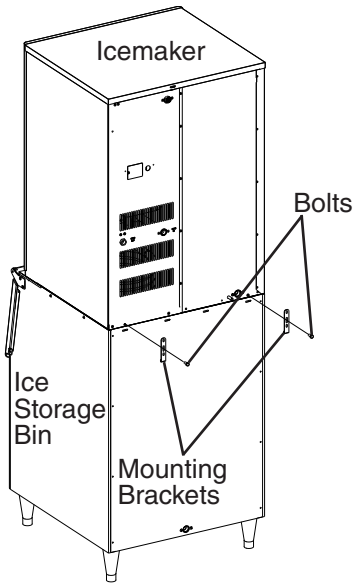

Model Shown: KM-1340MWJ

E. Electrical Connection

⚠ WARNING

For All Models

- Electrical connection must be hard-wired and must meet national, state, and local electrical code requirements. Failure to meet these code requirements could result in death, electric shock, serious injury, fire, or damage.
- The icemaker requires an independent power supply of proper capacity. See the nameplate for electrical specifications. Failure to use an independent power supply of proper capacity can result in a tripped breaker, blown fuse, damage to existing wiring, or component failure. This could lead to heat generation or fire.
- **THE ICEMAKER MUST BE GROUNDED.** Failure to properly ground the icemaker could result in death or serious injury.
- Electrical connection must be made in accordance with the instructions on the "WARNING" tag, provided with the pig tail leads in the junction box. See Fig. 3.

Additional Warnings for Remote Models

- **THE REMOTE CONDENSER UNIT MUST BE GROUNDED.** Power supply and ground connection to the remote condenser unit are supplied from the icemaker. See "II.G.6. Electrical Connection." Failure to properly ground the remote condenser unit could result in death or serious injury.
- To reduce the risk of electric shock, make all remote condenser unit connections before connecting the icemaker power supply.

NOTICE

On remote models, the appliance must have power for a minimum of 4 hours prior to startup to prevent compressor damage.

- Usually an electrical permit and services of a licensed electrician are required.
- The maximum allowable voltage variation is ±10 percent of the nameplate rating.
- ***NOTICE!* On single phase KM-901M_J(Z) and KM-1100M_J(Z) models, the main transformer's voltage tap switch must be positioned to match incoming voltage at startup.**
- ***NOTICE!* On single phase KM-1340M_J(Z) and KM-1601MRJZ models, the white lead must be connected to the neutral conductor of the power source. Miswiring may result in severe damage to the icemaker.**
- ***NOTICE!* On three phase models, the main transformer's voltage tap switch must be positioned to match incoming voltage at startup.**
- ***NOTICE!* On three phase models, connect the highest incoming voltage supply ("stinger leg") to the power wire dedicated to the compressor. See the wiring label on the icemaker.**
- The opening for the power supply connection is 7/8" DIA to fit a 1/2" trade size conduit.

KM-901M_J(Z)
KM-1100M_J(Z)

⚠WARNING
ELECTRICAL CONNECTION

THIS UNIT MUST BE GROUNDED
Failure to properly ground or wire this unit could result in death, serious injury, or severe damage to the icemaker.
The transformer's voltage tap switch must be positioned to match incoming voltage at startup.
See diagram below.

208-230/60/1

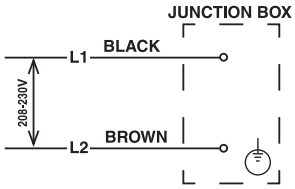

KM-1340M_J(Z)
KM-1601MRJZ

⚠WARNING
ELECTRICAL CONNECTION

THIS UNIT MUST BE GROUNDED
Failure to properly ground or wire this unit could result in death, serious injury, or severe damage to the icemaker. The white lead must be connected to the neutral conductor of the power source.
See diagram below.

208-230/60/1
(3 wire with neutral for 115V)

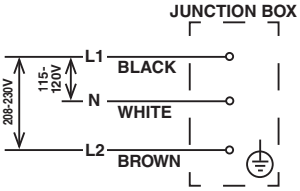

KM-901MRJZ3
KM-1340MRJZ3
KM-1601MRJZ3

⚠WARNING
ELECTRICAL CONNECTION

THIS UNIT MUST BE GROUNDED
Failure to properly ground or wire this unit could result in death, serious injury, or severe damage to the icemaker.
This unit must be connected to a three-phase power source.
The transformer's voltage tap switch must be positioned to match incoming voltage at startup.
See diagram below.

208-230/60/3

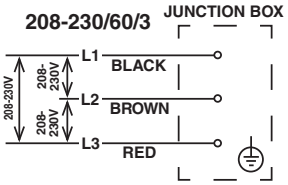

Fig. 3

F. Water Supply and Drain Connections
See Figs. 4 through 6

⚠ WARNING

Water supply and drain connections must be installed in accordance with applicable national, state, and local regulations.

NOTICE

- Normal operating water temperature should be within 45°F to 90°F (7°C to 32°C). Operation of the appliance, for extended periods, outside of this normal temperature range may affect appliance performance.
- Water supply pressure must be a minimum of 10 PSIG and a maximum of 113 PSIG. If the pressure exceeds 113 PSIG, the use of a pressure reducing valve is required.
- To prevent damage to the appliance, do not operate the appliance when the water supply is off, or if the pressure is below 10 PSIG. Do not run the appliance until the proper water pressure is reached.
- External filters, strainers, or softeners may be required depending on water quality. Contact your local Hoshizaki Certified Service Representative or local Hoshizaki distributor for recommendations.

- A plumbing permit and services of a licensed plumber may be required in some areas.
- The icemaker drain line, dispenser unit/ice storage bin drain line, and water-cooled condenser drain line (if applicable) must be run separately. The condensation drain line can be connected to the icemaker drain line or can be run separately.
- Drain lines must have 1/4" fall per foot (2 cm per 1 m) on horizontal runs to get a good flow. A vented tee connection is also required for proper flow.
- Drain lines should not be piped directly to the sewer system. An air gap of a minimum of 2 vertical inches (5 cm) should be between the end of the drain pipes from the icemaker and condensation drain, dispenser unit/ice storage bin, and water-cooled condenser (if applicable) and the floor drain.

1. Icemaker

Icemaker Water Supply Inlet	Minimum Icemaker Water Supply Line Size	Icemaker Drain Outlet	Minimum Icemaker Drain Line Size	Condensation Drain Outlet
1/2" Female Pipe Thread (FPT)	3/8" Nominal ID Copper Water Tubing or Equivalent	3/4" Female Pipe Thread (FPT)	3/4" Nominal ID Hard Pipe or Equivalent	3/8" OD Hard Tube

- An icemaker water supply line shut-off valve and drain valve must be installed.
- Be sure there is sufficient extra water supply line and drain line for the appliance to be pulled out for service.

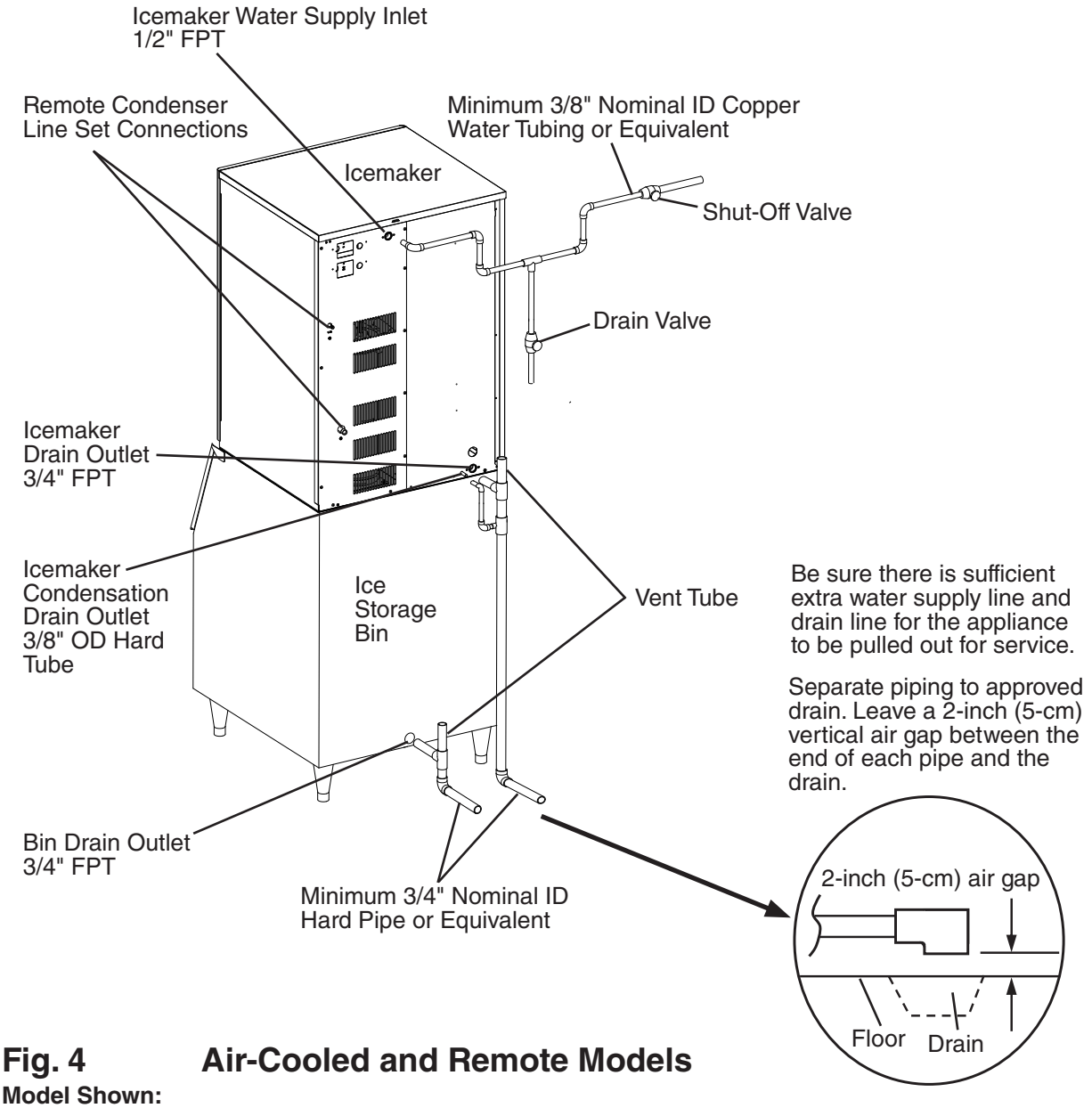

Fig. 4 **Air-Cooled and Remote Models**

Model Shown:
KM-1601MRJZ

2. Water-Cooled Condenser

a) Connection to an Open Drain System

Condenser Water Supply Inlet	Minimum Condenser Water Supply Line Size	Condenser Drain Outlet	Minimum Condenser Drain Line Size
1/2" Female Pipe Thread (FPT)	3/8" Nominal ID Copper Water Tubing or Equivalent	3/8" Female Pipe Thread (FPT)	3/8" Nominal ID Hard Pipe or Equivalent

- A condenser water supply line shut-off valve and drain valve must be installed.
- In some areas, a back flow preventer may be required in the cooling water circuit.
- In order to maintain the proper high side pressure, the condenser water supply inlet temperature should not drop below 45°F (7°C) and the condenser drain outlet temperature must be in the 104°F to 115°F (40°C to 46°C) range. Once the icemaker installation is complete, confirm the condenser drain outlet temperature 5 minutes after a freeze cycle starts. If the condenser drain outlet temperature is not in the proper range, use a flat blade screwdriver to rotate the adjustment screw on the water-regulating valve until the temperature is in the proper range (rotate counterclockwise to raise temperature or clockwise to lower temperature).

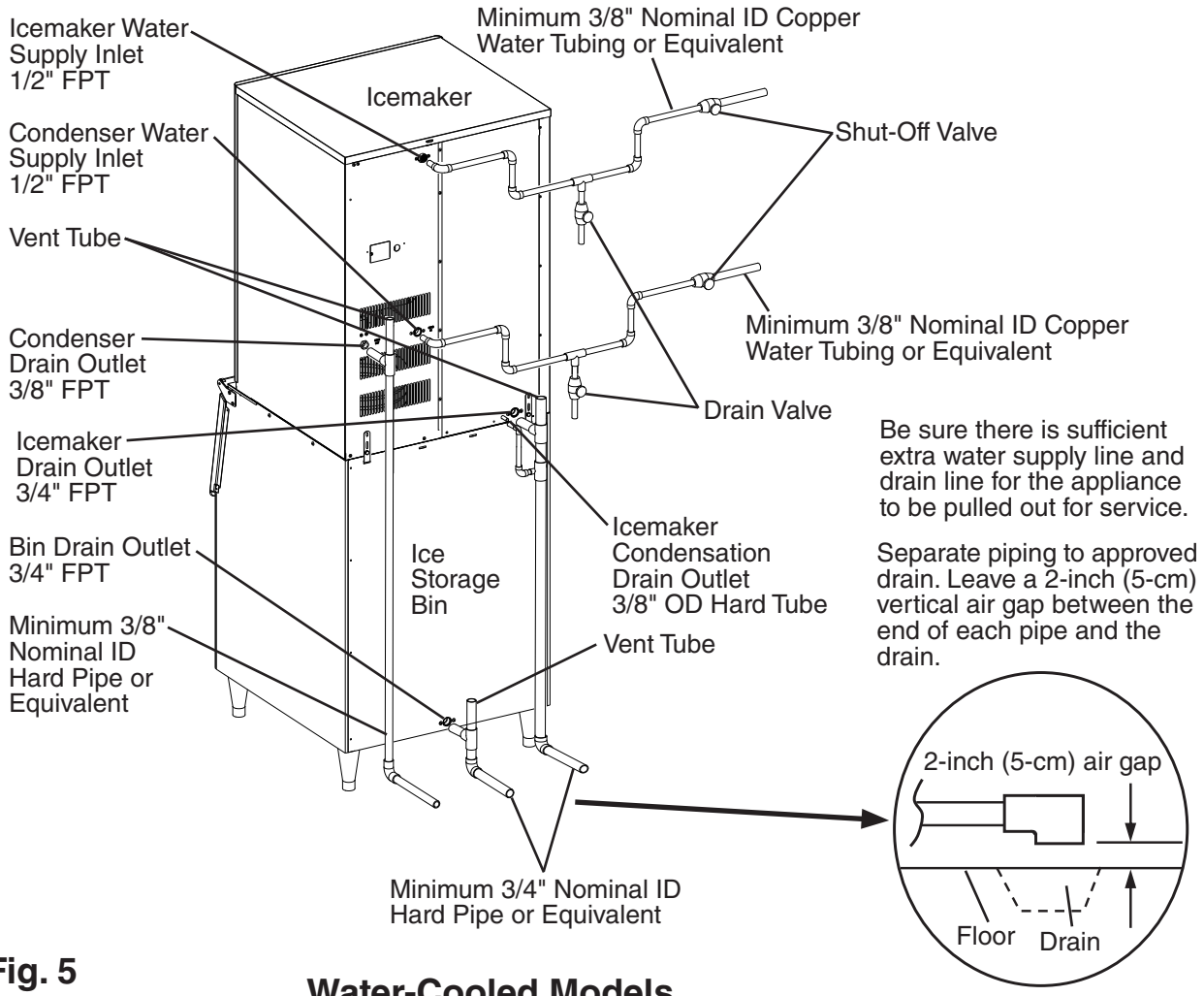

Fig. 5
Model Shown: KM-1340MWJ

Water-Cooled Models
Connection to an Open Drain System

b) Connection to a Closed Loop System

Condenser Water Supply Inlet	Minimum Condenser Water Supply Line Size	Condenser Return Outlet	Minimum Condenser Return Line Size
1/2" Female Pipe Thread (FPT)	3/8" Nominal ID Copper Water Tubing or Equivalent	3/8" Female Pipe Thread (FPT)	3/8" Nominal ID Copper Water Tubing or Equivalent

- Shut-off valves and drain valves must be installed at both the condenser water supply inlet and condenser return outlet.
- Minimum water flow to the condenser is 4 GPM.
- The pressure differential between the condenser water supply inlet and condenser return outlet must be no less than 10 PSIG.
- When using a glycol blend, the solution mixture should be less than 30% glycol.
- In order to maintain the proper high side pressure, the condenser water supply inlet temperature should not drop below 45°F (7°C) and the condenser return outlet temperature must be in the 104°F to 115°F (40°C to 46°C) range. Once the icemaker installation is complete, confirm the condenser return outlet temperature 5 minutes after a freeze cycle starts. If the condenser return outlet temperature is not in the proper range, use a flat blade screwdriver to rotate the adjustment screw on the water-regulating valve until the temperature is in the proper range (rotate counterclockwise to raise temperature or clockwise to lower temperature).

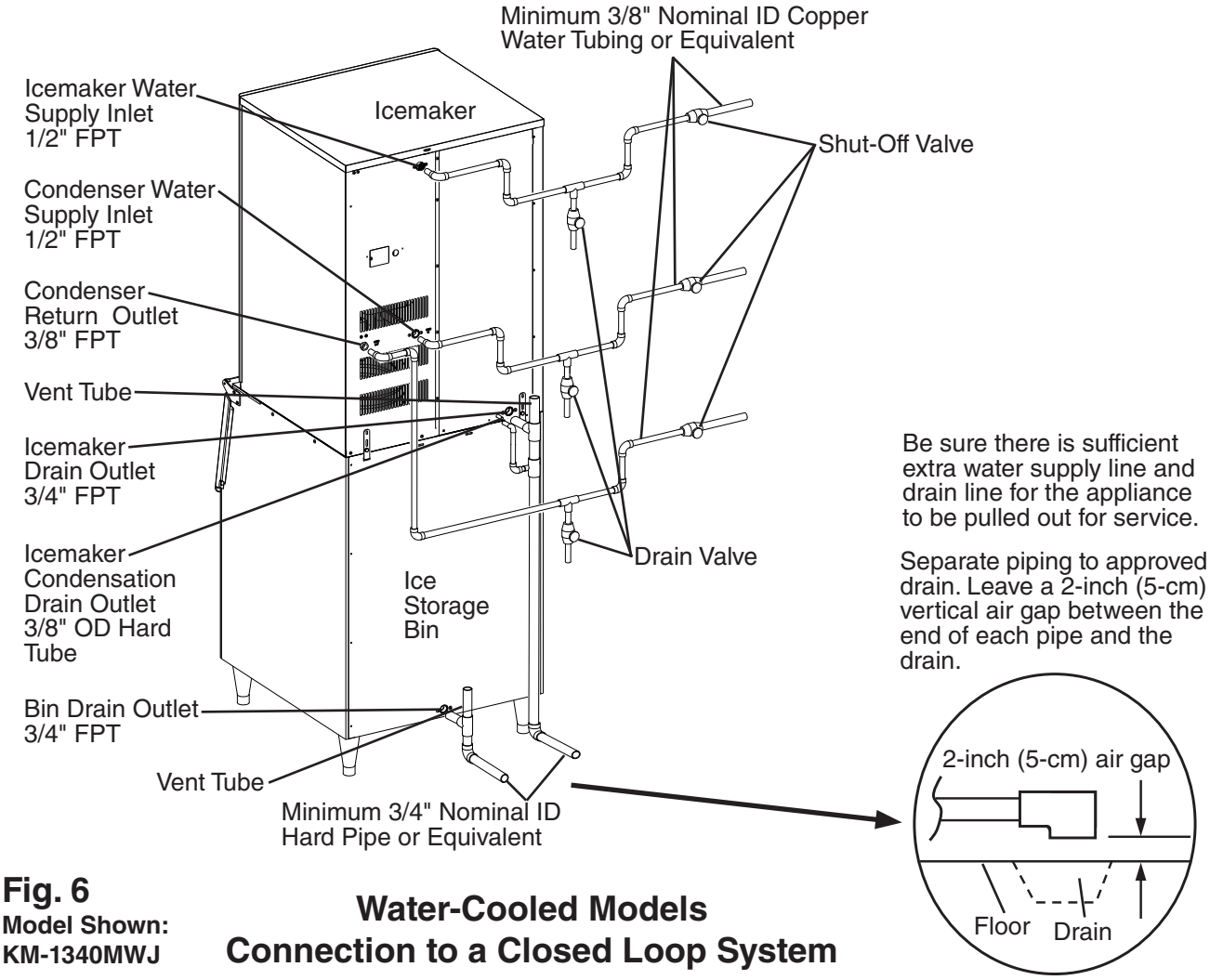

Fig. 6
Model Shown: KM-1340MWJ

Water-Cooled Models
Connection to a Closed Loop System

G. Installation of Remote Condenser Unit

⚠ WARNING

- Installation of remote condenser unit must be performed by properly trained and EPA-certified service personnel.
- The remote condenser unit must be installed in accordance with applicable national, state, and local codes and regulations.
- Failure to install the remote condenser unit within these guidelines may adversely affect safety, performance, component life, and warranty coverage.
- Power supply and ground wire to the remote condenser unit are supplied from the icemaker. For details, see section "II.G.6. Electrical Connection."

1. Location

NOTICE

- The remote condenser unit is intended for outdoor use. Normal operating ambient temperature must be within -20°F to +122°F (-29°C to +50°C). Operation of the remote condenser unit, for extended periods, outside of this normal temperature range may affect appliance performance.
- The maximum line length for the standard line sizes and refrigerant charge is 66' (20 m). With larger line sizes and/or additional refrigerant, the maximum line length is 100' (30.5 m). For details, see "II.G.4 Line Set Size and Refrigerant Charge."
- The maximum vertical distance between the remote condenser unit and the icemaker is 33' (10 m) above or 10' (3 m) below the icemaker. These distances are measured fitting to fitting. See Fig. 7.

The remote condenser unit must be positioned in a permanent site under the following guidelines:

- A firm and flat site.
- A dry and well ventilated area with 24" (61 cm) clearance at front and rear for proper air circulation and ease of maintenance and/or service should they be required. See Fig. 8.

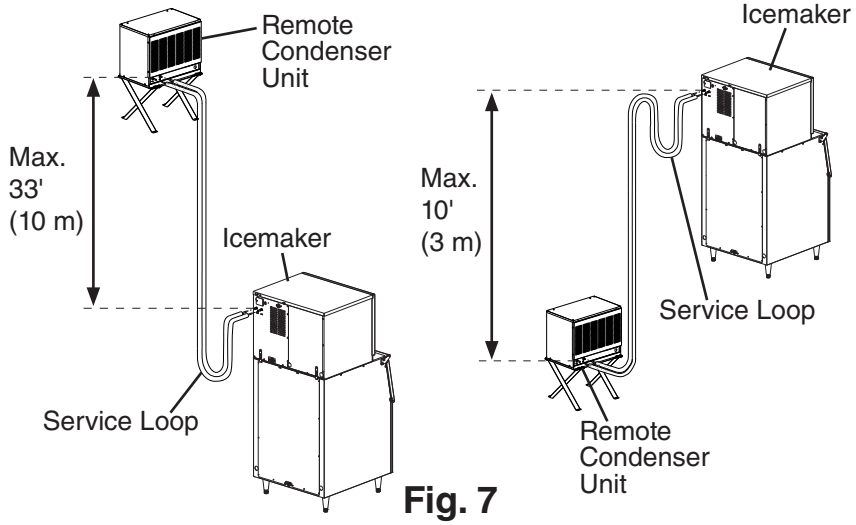

Fig. 7

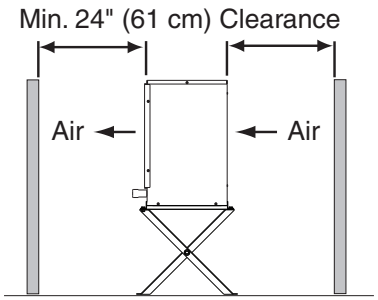

Fig. 8

2. Checks Before Installation

1) Remove the shipping carton, tape, and packing material.
2) Check that the refrigerant lines do not rub or touch lines or other surfaces, and that the fan blades move freely.

3. Setup

1) Assemble 2 sets of legs using the legs, bolts, and nuts provided. See Fig. 9.
2) Position 1 of the plates provided between a set of legs and the remote condenser unit, then secure the legs to the remote condenser unit with the bolts and nuts provided. Repeat on the other side with the remaining set of legs.
3) The bottom of each leg has a mounting hole. Secure the legs to the permanent site with 4 bolts (not included).

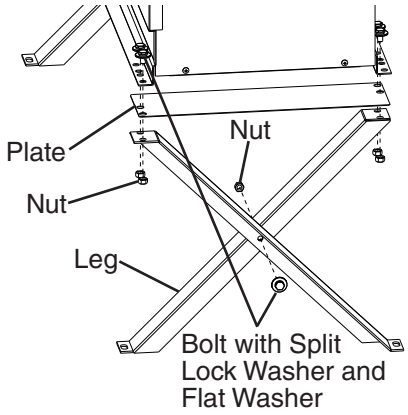

Fig. 9

4. Line Set Size and Refrigerant Charge

NOTICE
The icemaker, line set, and remote condenser unit must contain the same type of refrigerant. Mixing of refrigerants will result in improper operation and possible damage to the refrigeration system.

Line Set Size and Refrigerant Charge							
Hoshizaki Icemaker	**Hoshizaki Remote Condenser Unit**	**Line Set Up to 66' (20 m)**			**Line Set Greater than 66' (20 m) Maximum 100' (30.5 m)**		
		Liquid Line	**Discharge Line**	**Charge Adjustment**	**Liquid Line**	**Discharge Line**	**Charge Adjustment (R-404A)**
KM-901MRJZ/3 KM-1100MRJZ KM-1340MRJZ/3	URC-14FZ	3/8" OD	1/2" OD	Not Applicable	3/8" OD	1/2" OD	Add 0.4 oz. for each foot over 66' (40 g for each meter over 20 m). Write new total charge on icemaker's rating label.
KM-1601MRJZ/3	URC-22FZ	3/8" OD	5/8" OD	Not Applicable	3/8" OD	5/8" OD	Add 0.4 oz. for each foot over 66' (40 g for each meter over 20 m). Write new total charge on icemaker's rating label.

5. Line Set Installation

⚠ WARNING

- R-404A itself is not flammable at atmospheric pressure and temperatures up to 176°F (80°C).
- R-404A itself is not explosive or poisonous. However, when exposed to high temperatures (open flames), R-404A can be decomposed to form hydrofluoric acid and carbonyl fluoride both of which are hazardous.
- Do not use silver alloy or copper alloy containing arsenic.
- Use an electronic leak detector or soap bubbles to check for leaks. Add a trace of refrigerant to the line set tubing through the service valve access ports (if using an electronic leak detector), and then raise the pressure using nitrogen gas (140 PSIG). Do not use R-404A as a mixture with pressurized air for leak testing.

NOTICE

- Do not open any service valve until the line set installation is complete and leak tested.
- Ensure that there are no traps and no kinks in the line set.
- Do not coil extra line set.

1) Route the factory line set or appropriate size copper tubing. When field fabricating, insulate the copper tubes separately. Leave a service loop behind the icemaker to allow the icemaker to be pulled out for service. See Fig. 7.

   Note:
   - The service loop is not considered an oil trap.
   - The maximum line length for the standard line sizes and refrigerant charge is 66' (20 m). With larger line sizes and/or additional refrigerant, the maximum line length is 100' (30.5 m). For details, see "II.G.4 Line Set Size and Refrigerant Charge."

2) Remove any extra line set length, then insulate the two copper tubes separately.

Icemaker

3) Remove the Schrader valve cores from the icemaker service valves.

NOTICE

- Before brazing, remove the Schrader valve cores from the service valve access ports.
- When brazing, protect the service valve by using a wet cloth to prevent the service valve from overheating.
- Braze all fittings while purging with nitrogen gas flowing at a pressure of 3 to 4 PSIG.

4) Braze the line set copper tubes to the icemaker liquid and discharge line service valves.

Condenser

5) Remove the Schrader valve cores from the remote condenser unit service valve access ports.

NOTICE
• Before brazing, remove the Schrader valve cores from the service valve access ports. • When brazing, protect the service valve by using a wet cloth to prevent the service valve from overheating. • Braze all fittings while purging with nitrogen gas flowing at a pressure of 3 to 4 PSIG.

6) Braze the line set copper tubes to the remote condenser unit liquid and discharge line service valves.

7) Allow the service valves to cool, then replace the Schrader valve cores. Attach the gauge manifold hoses.

8) Add a trace of refrigerant to the line set tubing through the service valve access ports (if using an electronic leak detector), and then raise the pressure using nitrogen gas (140 PSIG). Use an electronic leak detector or soap bubbles to check for leaks. **WARNING! Do not use R-404A as a mixture with pressurized air for leak testing.**

9) After checking the line set for leaks, vent the nitrogen charge from the line set.

10) Evacuate the line set. Allow the vacuum pump to pull down to a 29.9" Hg vacuum. Evacuating period depends on pump capacity.

11) After evacuation, charge each line set tube with R-404A vapor to a pressure of 15 to 30 PSIG.

12) Close both gauge manifold valves.

13) If the line set exceeds 66' (20 m), see "II.G.4. Line Set Size and Refrigerant Charge" for proper charging of the appliance. If not, continue to step 14.

14) Open the icemaker service valves first, then open the remote condenser unit service valves.

15) Disconnect the gauge manifold hoses.

16) Replace all service valve caps and tighten.

17) Insulate all exposed tubing and fittings.

6. Electrical Connection

⚠ WARNING

- Electrical connection must meet national, state, and local electrical code requirements. Failure to meet these code requirements could result in death, electric shock, serious injury, fire, or damage.
- To reduce the risk of electric shock, make all remote condenser unit connections before connecting the icemaker power supply.
- **THE REMOTE CONDENSER UNIT MUST BE GROUNDED.** Install a ground wire from the icemaker fan motor junction box to the remote condenser unit junction box. Use wire of an appropriate gage and outdoor rating. Failure to properly ground the remote condenser unit could result in death or serious injury.
- Install line and neutral wires from the fan motor leads in the icemaker fan motor junction box to the leads in the remote condenser unit junction box. Use wire of an appropriate gage and outdoor rating.
- Do not connect the fan motor leads in the icemaker to incoming power source. Do not connect the fan motor leads in the icemaker together. Do not allow the leads to contact the junction box walls.
- Do not connect the remote condenser unit to an external power source.

NOTICE

On remote models, the appliance must have power for a minimum of 4 hours prior to startup to prevent compressor damage.

- Usually an electrical permit and services of a licensed electrician are required.
- The opening for the power supply connection is 7/8" DIA to fit a 1/2" trade size conduit.

1) Remove the remote condenser unit louver panel. See Fig. 10.
2) Remove the icemaker fan motor junction box cover. Remove the remote condenser unit junction box cover.

Fig. 10

Remote Condenser Unit

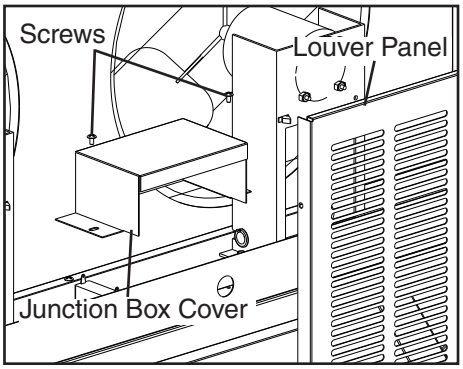

Icemaker

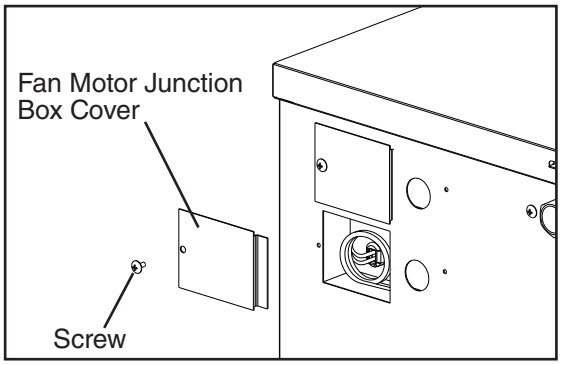

3) Install a ground wire from the icemaker fan motor junction box to the remote condenser unit junction box. Use wire of an appropriate gage and outdoor rating.

4) Install line and neutral wires from the fan motor leads in the icemaker fan motor junction box to the leads in the remote condenser unit junction box. Use wire of an appropriate gage and outdoor rating.

5) Replace the junction box covers and the louver panel in their correct positions.

7. Stacking Remote Condenser Unit

1) Install the lower remote condenser unit as described earlier in this section.

2) Place the upper remote condenser unit on top of the lower remote condenser unit. See Fig. 11.

3) Secure the upper remote condenser unit to the lower remote condenser unit with the 4 screws provided.

4) Install refrigerant lines and make electrical connection as described earlier in this section.

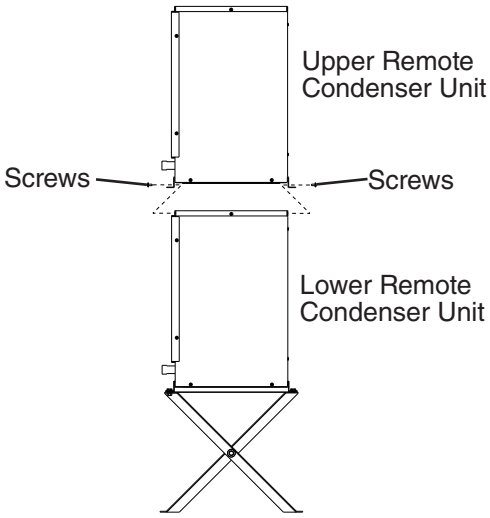

Fig. 11

H. Final Checklist

1. Pre-Startup

1) Is the icemaker level?
2) Is the icemaker in a site where the ambient temperature is within 45°F to 100°F (7°C to 38°C) and the water temperature within 45°F to 90°F (7°C to 32°C) all year around?
3) For KM-901M_J(Z)/3 and KM-1100M_J(Z) models, is there at least 12" (30 cm) clearance at rear, sides, and top of the icemaker.
   For KM-1340M_J(Z)/3 and KM-1601MRJZ/3 models, is there at least 6" (15 cm) clearance at rear, sides, and top of the icemaker.
4) Have the shipping carton, tape, and packing material been removed from the appliance? Is the cube guide in the correct position? Are the separators between the evaporator banks properly attached to their holding clips?
5) Have all electrical and water connections been made? Do electrical and water connections meet applicable national, state, and local code and regulation requirements?
6) Has the power supply voltage been checked or tested against the nameplate rating? Has a proper ground been installed to the icemaker? On remote models, has a proper ground also been installed to the remote condenser unit?
7) Are the water supply and drain lines sized as specified? Are the water supply line shut-off valve(s) and drain valve(s) installed? Has the water supply pressure been checked to ensure a minimum of 10 PSIG and a maximum of 113 PSIG?
8) Is the compressor snug on all mounting pads? Have the refrigerant lines been checked to make sure they do not rub or touch other lines or surfaces? Have the fan blades (if applicable) been checked to make sure they turn freely?
9) On remote models:
   - Is the line set sized as specified, insulated, tightened, and free of leaks and kinks?
   - If the line set exceeds 66' (20 m), has the charge been adjusted as specified?
   - Has the appliance power supply been on for a minimum of 4 hours?
   - Is the remote condenser unit in a site where the ambient temperature is within -20°F to +122°F (-29°C to +50°C) all year around?
   - Is there at least 24" (61 cm) clearance around the remote condenser unit?
10) Continue to "I. Startup."

2. Post-Startup

⚠ WARNING
CHOKING HAZARD: Ensure all components, fasteners, and thumbscrews are securely in place after installation. Make sure that none have fallen into the dispenser unit/ice storage bin.

1) Has the bin control been set to the proper setting for the application?
2) Has the bin control operation been confirmed?
3) Are all components, fasteners, and thumbscrews securely in place?
4) Has the end user been given the instruction manual, and instructed on how to operate the appliance and the importance of the recommended periodic maintenance?
5) Has the end user been given the contact information of an authorized service agent?
6) Has the warranty registration been completed and submitted to the factory?

I. Startup

1. Bin Control Setting

An ultrasonic sensor is used as the bin control to control the level of ice in the dispenser unit/ice storage bin. The bin control setting must be set to match the application to avoid possible icemaker movement, water leakage, or ice overflow.

⚠ WARNING

- Improper adjustment may adversely affect safety, performance, component life, and warranty coverage.
- On dispenser unit applications, do not increase ice level above the recommended setting listed below. Higher ice levels could result in icemaker movement, water leakage, or ice overflow.

NOTICE

Do not allow top kits or top kit risers (if applicable) to interfere with the bin control lens sensing area or the icemaker will not operate properly.

1) Make sure the power supply is off. If not already removed, remove the front and top panels and the control box cover.
2) Confirm the correct control board bin control setting required for your application and adjust as detailed below.

Application	Bin Control Setting	Reference
Standard Ice Storage Bins (Factory Default)	1	See Fig. 12
Hoshizaki DB and DM Dispensers	2	
Coca-Cola Freestyle® Dispensers	3	
Non-Hoshizaki Dispensers	Measurement Required	See Fig. 13

For Standard Ice Storage Bins, Hoshizaki DB and DM Dispenser Units, and Coca-Cola Freestyle® Dispenser Units

Application	Bin Control Ice Level Settings	
	Bin Control Setting	Shutdown Distance From Bin Control Lens (Restart is 4 in. (102 mm) below shutdown distance)
Standard Ice Storage Bins	1 (Factory Default)	304 mm (12") Do not adjust dispensers to this setting.
Hoshizaki DB and DM Dispensers	2	335 mm (13")
Coca-Cola Freestyle® Dispensers	3	416 mm (16 3/8")
Optional Setting	4	522 mm (20.5")
	5	610 mm (24")

⚠ WARNING

Confirm that the final ice level location does not allow for icemaker movement, water leakage, or ice overflow.

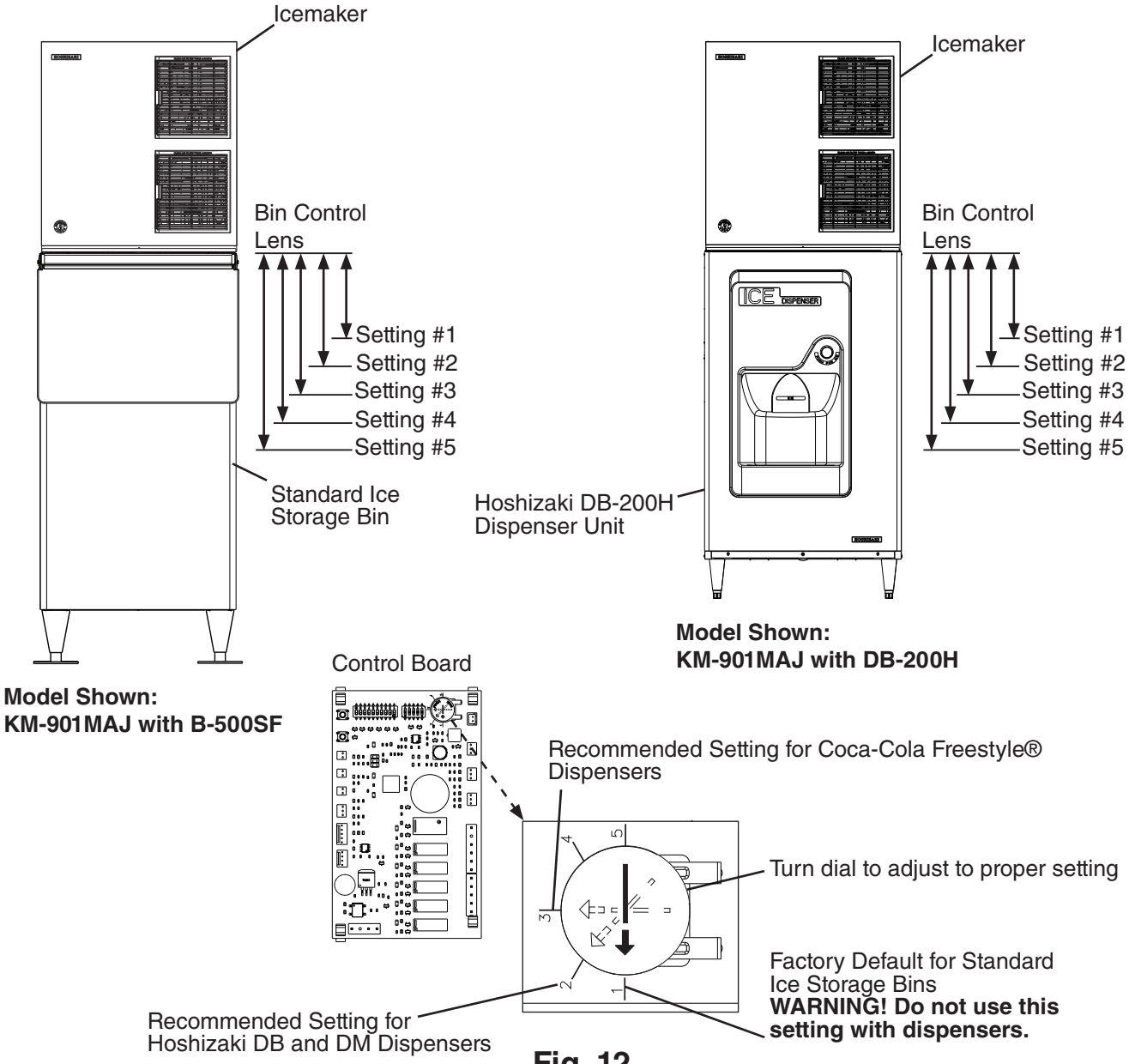

Fig. 12

For Non-Hoshizaki Dispenser Units

Bin Control Ice Level Settings	
Bin Control Setting	Shutdown Distance From Bin Control Lens (Restart is 4 in. (102 mm) below shutdown distance)
1 (Factory Default)	304 mm (12") Do not adjust dispensers to this setting.
2	335 mm (13")
3	416 mm (16 3/8")
4	522 mm (20.5")
5	610 mm (24")

⚠ WARNING

Confirm that the final ice level location does not allow for icemaker movement, water leakage, or ice overflow.

NOTICE

The ice level must be lower than the top of the dispenser unit. Also, be sure the top kit or top kit riser (if applicable) are clear from the bin control lens sensing area.

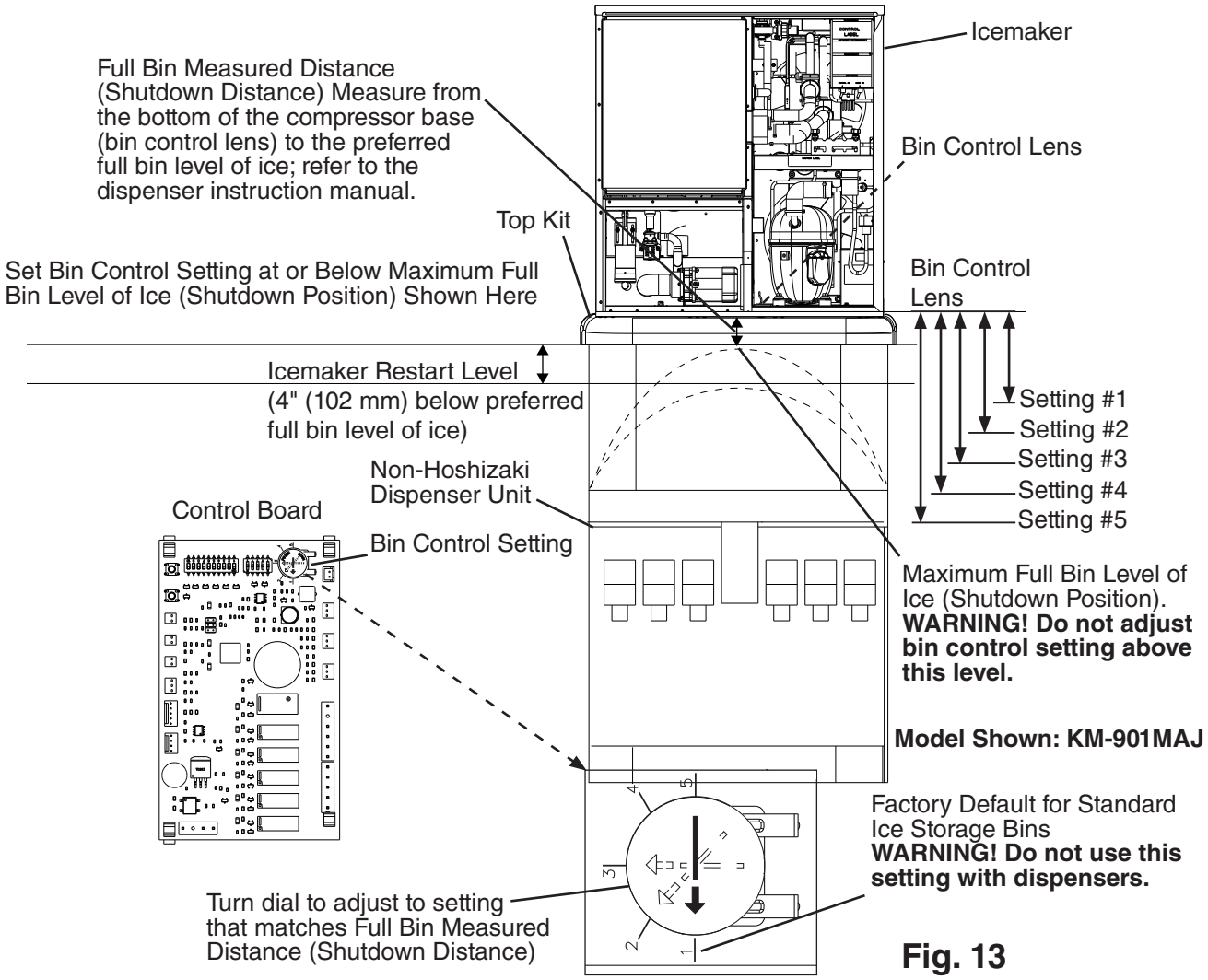

Fig. 13

2. Appliance Startup and Bin Control Check

⚠ WARNING

- All parts are factory-adjusted. Improper adjustments may adversely affect safety, performance, component life, and warranty coverage.
- Make sure the appliance has been installed as outlined in this manual and that the water supply is on.
- Improper adjustment may adversely affect safety, performance, component life, and warranty coverage.

NOTICE

- If the icemaker is turned off, wait for at least 3 minutes before restarting the appliance to prevent damage to the compressor.
- To prevent damage to the water pump seal, do not leave the control switch in the "PUMP" position for extended periods when the water tank is empty.
- At startup, confirm that all internal and external connections are free of leaks.
- Do not allow top kits or top kit risers (if applicable) to interfere with the bin control lens sensing area or the icemaker will not operate properly.

Additional Notice for Remote Models

- The icemaker must have power for a minimum of 4 hours prior to startup to prevent compressor damage.

1) If not already removed, remove the front and top panels and control box cover. Make sure the bin control setting has been adjusted as outlined in "II.I.1. Bin Control Setting."
2) Open the water supply line shut-off valve(s).
3) Move the mode switch on the control box to the "ICE" position, then move the control switch to the "ON" position. Turn on the power supply, and allow the icemaker to operate.
4) Confirm the control board "BIN CLS" LED is off (bin empty). See Fig. 14.

Ice Level in Bin	Control Board "BIN CLS" LED
Empty	OFF
Full	ON

5) If the control board "BIN CLS" is on (indicating a full bin), correct any interference from the top kit or top kit riser (if applicable).

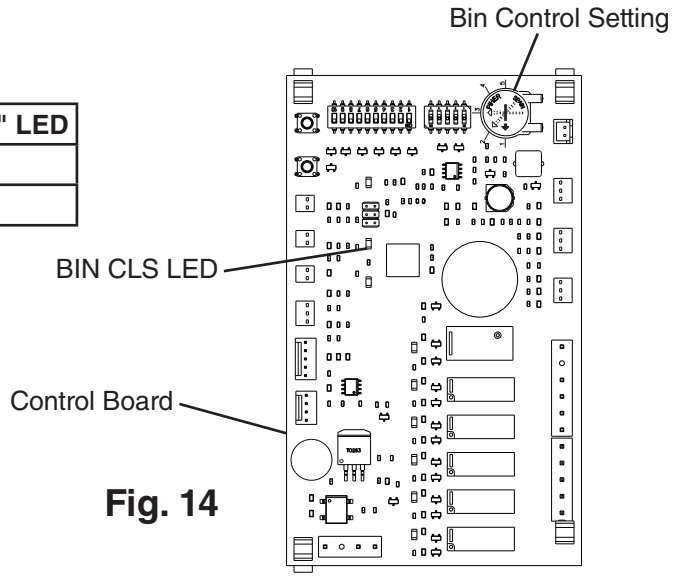

Fig. 14

6) 1 min. fill cycle begins. Place an object 5" to 7" (127 to 178 mm) away from the bin control lens. See Fig. 15. 15 sec. later, the icemaker shuts down. Remove the object from the bin control lens. 30 sec. later, the icemaker restarts.

For bin control shutdown times per cycle, see the table below.

Cycle at Bin Control Activation	**Shutdown**
1 min. Fill Cycle	15 sec. after activation.
Harvest Cycle	If engaged 15 sec. or longer, at the end of harvest cycle.
Freeze Cycle	15 sec. after activation if activated at least 15 sec. before the 5-min. short cycle protection timer terminates. Otherwise, at the end of the next harvest cycle.

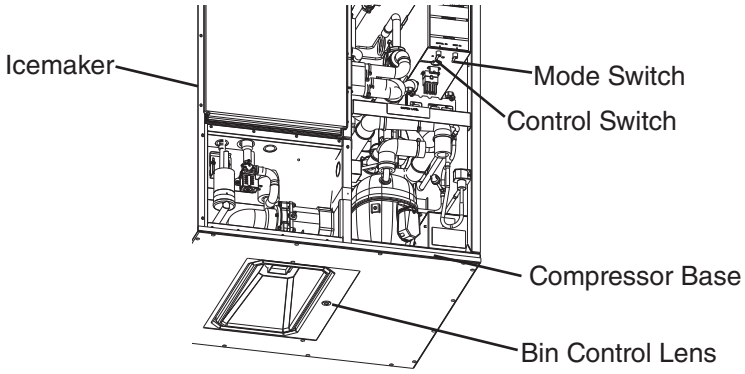

Fig. 15

7) Once the icemaker restarts, move the control switch to the "OFF" position, then turn off the power supply.

8) Replace and secure the control box cover in its correct position. Move the control switch to the "ON" position.

9) Replace the top and front panels in their correct positions.

10) Turn on the power supply, allow the icemaker to operate for 10 min.

11) After 10 min., turn off the power supply, then remove the front panel and front insulation panel.

12) Move the control switch to the "OFF" position.

13) Remove the splash guard and cube guide B. See Fig. 16. Next, slide cube guide A to the right and pull forward to remove cube guide A. ***NOTICE!*** **The rear evaporator plastic bracket must be pulled forward and up to allow removal of cube guide A.**

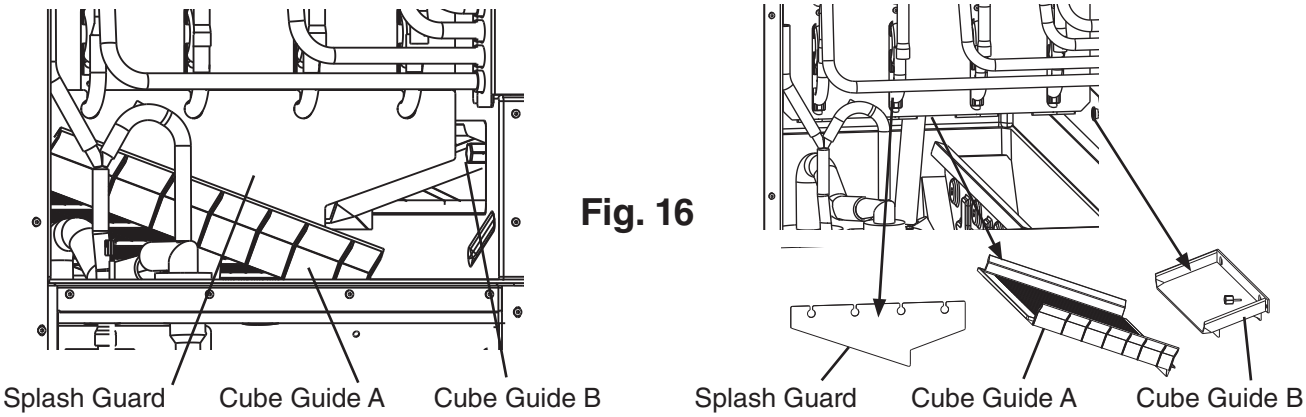

Fig. 16

14) Remove the rubber cap and sleeve covering the overflow pipe. See Fig. 17. Unscrew the overflow pipe.

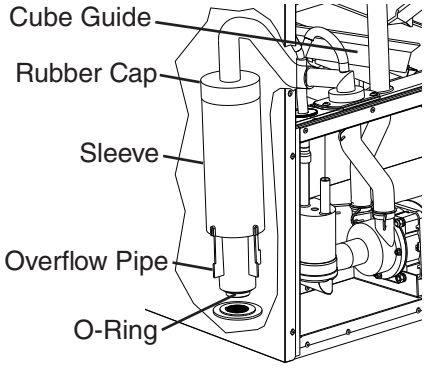

Fig. 17

15) After the water tank has drained, reconnect the overflow pipe. Replace the rubber cap and sleeve in their correct positions. ***NOTICE!*** **Make sure the O-ring is attached to the bottom of the overflow pipe and be careful not to cross thread the overflow pipe.**

16) Replace cube guide A in its correct position. ***NOTICE!*** **The rear evaporator plastic bracket must be pulled forward and up to allow proper positioning of cube guide A.**

17) Replace cube guide B and the splash guard in their correct positions.

18) Replace the front insulation panel in its correct position.

19) Clean the dispenser unit/ice storage bin liner using a neutral cleaner. Rinse thoroughly after cleaning.

20) Move the control switch to the "ON" position. Replace all panels in their correct positions.

21) Turn on the power supply to start the automatic icemaking process.

22) On water-cooled models, confirm proper condenser drain outlet/return outlet temperature as outlined in "II.F.2. Water-Cooled Condenser."

23) Return to "II.H.2. Post-Startup" and complete final checklist.

III. Maintenance

The appliance must be maintained in accordance with the instruction manual and labels provided. Consult with your local Hoshizaki Certified Service Representative about maintenance service.

⚠ WARNING

- Only qualified service technicians should service the appliance.
- To reduce the risk of electric shock, do not touch the control switch or mode switch with damp hands.
- Move the control switch to the "OFF" position and turn off the power supply before servicing. Lockout/Tagout to prevent the power supply from being turned back on inadvertently.
- **CHOKING HAZARD:** Ensure all components, fasteners, and thumbscrews are securely in place after any maintenance is done to the appliance. Make sure that none have fallen into the dispenser unit/ice storage bin.

A. Maintenance Schedule

The maintenance schedule below is a guideline. More frequent maintenance may be required depending on water quality, the appliance's environment, and local sanitation regulations.

Maintenance Schedule		
Frequency	**Area**	**Task**
Daily	Scoop	Clean the ice scoop using a neutral cleaner. Rinse thoroughly after cleaning.
Bi-Weekly	Air Filters	Inspect. Wash with warm water and neutral cleaner if dirty.
Monthly	External Water Filters	Check for proper pressure and change if necessary.
	Bin Control Lens	Wipe down the bin control lens, (located on the bottom of the icemaker) with a neutral cleaner. Rinse thoroughly after cleaning.
	Icemaker Exterior	Wipe down with a clean, soft cloth. Use a damp cloth containing a neutral cleaner to wipe off oil or dirt build up. Clean any chlorine staining (rust colored spots) using a non-abrasive cleanser.
	Underside of Icemaker and Top Kits; Bin Door and Snout	Wipe down with a clean, soft cloth. Use a damp cloth containing a neutral cleaner to wipe off oil or dirt build up. Clean any chlorine staining (rust colored spots) using a non-abrasive cleanser.
Yearly	Icemaker and Dispenser Unit/Ice Storage Bin	Clean and sanitize per the cleaning and sanitizing instructions provided in this manual. See "III.B. Cleaning and Sanitizing Instructions."
	Water Supply Inlet	Close the icemaker water supply line shut-off valve and drain the water system. Clean the water supply inlet screen.
	Condenser	Inspect. Clean if necessary by using a brush or vacuum cleaner. More frequent cleaning may be required depending on location.
	Water Hoses	Inspect the water hoses and clean/replace if necessary.

B. Cleaning and Sanitizing Instructions

The icemaker must be cleaned and sanitized at least once a year.
More frequent cleaning and sanitizing may be required in some water conditions.

⚠ WARNING

- To prevent injury to individuals and damage to the icemaker, do not use ammonia type cleaners.
- Carefully follow any instructions provided with the bottles of cleaning and sanitizing solution.
- Always wear liquid-proof gloves and goggles to prevent the cleaning and sanitizing solutions from coming into contact with skin or eyes.
- Do not leave the icemaker unattended when panels are off.

NOTICE

- To prevent damage to the water pump, do not leave the control switch in the "PUMP" position for extended periods when the water tank is empty.
- Terminating a cleaning/sanitizing cycle early:
  a) Terminating a cleaning cycle at step 4 or earlier in "Cleaning" below, returns the icemaker to the normal icemaking mode. The control board "CLEAN" LED turns off.
  b) Terminating a cleaning cycle at step 5 or later in "Cleaning" below, sends the icemaker into a 3-rinse cycle (app. 18 min.). The control board "CLEAN" LED remains on throughout the 3-rinse cycles. After the 3rd rinse cycle, icemaker goes into the normal icemaking mode and the control board "CLEAN" LED turns off.

Preparation

1) Remove the front panel, then move the control switch to the "OFF" position. Make sure the mode switch is in the "ICE" position, then replace the front panel. After 3 minutes, move the control switch to the "ON" position and replace the front panel.
2) Allow the appliance to run until the compressor energizes. Once the compressor energizes, allow the appliance to run for an additional 3 minutes, then remove the front panel. Move the control switch to the "OFF" position.
3) Remove all ice from the dispenser unit/ice storage bin. **WARNING! If on a dispenser unit, turn off the dispenser unit power supply after dispensing the ice.**

Cleaning

4) Move the mode switch to the "CLEAN" position, then move the control switch to the "ON" position (1 short beep occurs, then 3 seconds later 1 long beep occurs). Replace the front panel. The water tank drains and then fills.
5) When the control board starts beeping (2 beep sequence), remove the front panel. Move the control switch to the "OFF" position.
6) Remove the front insulation panel, then pour Hoshizaki "Scale Away" into the water tank. See the table below for amount. Replace the front insulation panel.

Model	Scale Away
KM-901 and KM-1100	14 fl. oz. (414 ml)
KM-1340 and KM-1601	30 fl. oz. (887 ml)

7) Move the control switch to the "ON" position (1 short beep occurs, then 3 seconds later 1 long beep occurs). Replace the front panel. To avoid excessive foaming in the water tank, there is a 1 minute delay before circulation begins. After approximately 30 minutes of circulation, the icemaker performs 3 rinse cycles.

8) When the control board starts beeping (5 beep sequence), remove the front panel. Move the control switch to the "OFF" position.

9) In bad or severe water conditions, turn off the power supply, then remove, clean (cleaning solution = 5 oz. Hoshizaki "Scale Away" per gallon of warm water), rinse, and replace the cube guide, float switch, water supply tubes, spray tubes, and spray guides; turn on the power supply when complete. Otherwise, continue to step 10.

10) Wipe down the bin control lens, (located on the bottom of the icemaker) with a neutral cleaner. Rinse thoroughly after cleaning. Note: If the bottom of the icemaker is not accessible in your application, remove the top and right side panels, then remove the thumbscrew securing the bin control housing and remove the bin control housing from the base. After cleaning and rinsing the bin control lens, replace the bin control housing in its correct position and secure it with the thumbscrew. Next, replace the right side and top panels in their correct positions.

Sanitizing

11) Confirm the mode switch is in the "CLEAN" position, then move the control switch to the "ON" position (1 short beep occurs, then 3 seconds later 1 long beep occurs). Replace the front panel. The water tank drains and then fills.

12) When the control board starts beeping (2 beep sequence), remove the front panel. Move the control switch to the "OFF" position.

13) Remove the front insulation panel, then pour 7.5% sodium hypochlorite solution (chlorine bleach) into the water tank. See the table below for amount. Replace the front insulation panel. **IMPORTANT! Use regular bleach with no additives. Using a bleach with additives causes excessive foaming during sanitizing, reducing the effectiveness of sanitizing.**

Model	7.5% Sodium Hypochlorite Solution
KM-901 and KM-1100	.89 fl. oz. (26.25 ml)
KM-1340 and KM-1601	1.88 fl. oz. (55.5 ml)

14) Move the control switch to the "ON" position (1 short beep occurs, then 3 seconds later 1 long beep occurs). Replace the front panel. To avoid excessive foaming in the water tank, there is a 1 minute delay before circulation begins. After approximately 30 minutes of circulation, the icemaker performs 3 rinse cycles.

15) When the control board starts beeping (5 beep sequence), remove the front panel. Move the control switch to the "OFF" position.

16) Clean the dispenser unit/ice storage bin liner using a neutral cleaner. Rinse thoroughly after cleaning.

17) Move the mode switch to the "ICE" position, then move the control switch to the "ON" position. Note: If on a dispenser unit, turn on the dispenser unit power supply.

18) Replace all panels in their correct positions.

IV. Preparing the Appliance for Periods of Non-Use

NOTICE
• When storing the appliance for an extended time or in sub-freezing temperatures, follow the instructions below to prevent damage. • To prevent damage to the water pump, do not leave the control switch in the "PUMP" position for extended periods when the water tank is empty.

When the appliance is not used for two or three days under normal conditions, it is sufficient to move the control switch to the "OFF" position. When storing the appliance for an extended time or in sub-freezing temperatures, follow the instructions below.

1. Remove the water from the icemaker water supply line:

1) Remove the front panel. Move the control switch to the "OFF" position, then turn off the power supply.
2) Close the icemaker water supply line shut-off valve, then open the icemaker water supply line drain valve.
3) Allow the line to drain by gravity.
4) Attach a compressed air or carbon dioxide supply to the icemaker water supply line drain valve.
5) Move the control switch to the "ICE" position.
6) Replace the front panel in its correct position, then turn on the power supply.
7) Blow the icemaker water supply line out using the compressed air or carbon dioxide supply.
8) Close the icemaker water supply line drain valve.

2. Drain the water tank:

1) Remove the front panel. Move the control switch to the "OFF" position, then turn off the power supply.
2) Remove the front insulation panel.
3) Remove the splash guard and cube guide B. See Fig. 18. Next, slide cube guide A to the right and pull forward to remove cube guide A. ***NOTICE!*** **The rear evaporator plastic bracket must be pulled forward and up to allow removal of cube guide A.**

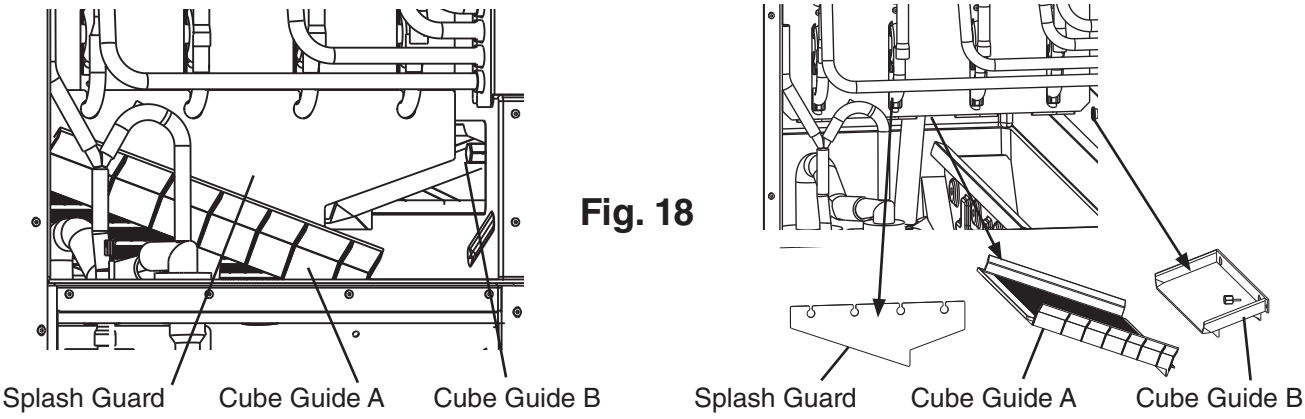

Fig. 18

4) Remove the rubber cap and sleeve covering the overflow pipe. See Fig. 17. Unscrew the overflow pipe.

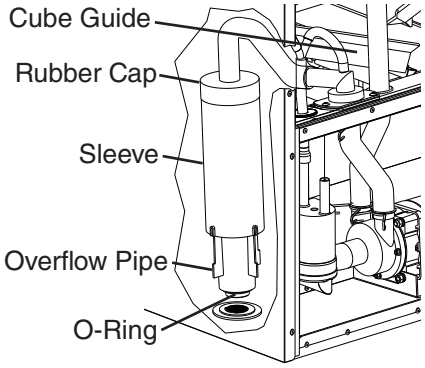

Fig. 17

5) After the water tank has drained, reconnect the overflow pipe. Replace the rubber cap and sleeve in their correct positions. ***NOTICE!*** **Make sure the O-ring is attached to the bottom of the overflow pipe and be careful not to cross thread the overflow pipe.**

6) Replace cube guide A in its correct position. ***NOTICE!*** **The rear evaporator plastic bracket must be pulled forward and up to allow proper positioning of cube guide A.**

7) Replace cube guide B and the splash guard in their correct positions.

8) Replace the front insulation panel and front panel in their correct positions.

9) Remove all ice from the dispenser unit/ice storage bin. Clean the dispenser unit/ice storage bin liner using a neutral cleaner. Rinse thoroughly after cleaning.

3. On water-cooled model, remove the water from the water-cooled condenser:

1) Make sure the power supply is off, then remove the front, top, and right side panels.

2) Close the condenser water supply line shut-off valve. If connected to a closed loop system, also close the condenser return line shut-off valve.

3) Open the condenser water supply line drain valve. If connected to a closed loop system, also open the condenser return line drain valve.

4) Attach a compressed air or carbon dioxide supply to the condenser water supply line drain valve.

5) Open the water regulating valve by using a screwdriver to pry up on the spring retainer underneath the spring. While holding the valve open, blow out the condenser using the compressed air or carbon dioxide supply until water stops coming out.

6) Close the drain valve(s).

7) Replace the right side, top, and front panels in their correct positions.

V. Disposal

The appliance contains refrigerant and must be disposed of in accordance with applicable national, state, and local codes and regulations. Refrigerant must be recovered by properly certified service personnel.

HOSHIZAKI AMERICA, INC.

618 Hwy. 74 South, Peachtree City, GA 30269 USA (P) 770.487.2331 (F) 770.487.3360 hoshizakiamerica.com 1A7735-011