GSW®

Intertek

SANITATION LISTED
3176427
Conforms to NSF
STD 2 & STD 4

SEE18181R

Economy One Tub Sink w/Right Drain Board

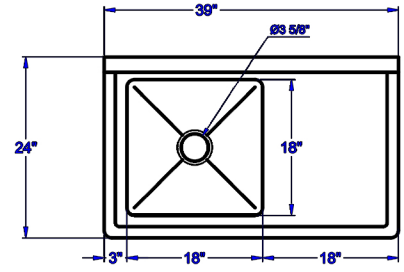

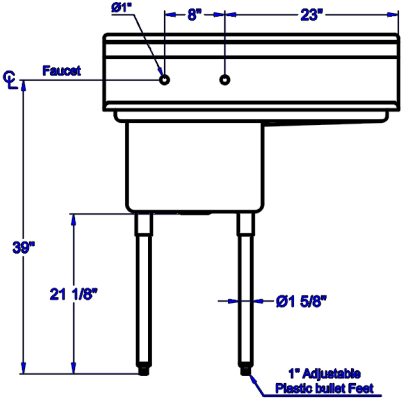

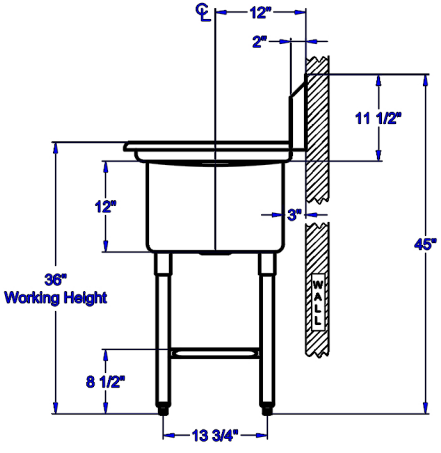

Visit our website at
www.GSW-USA.com
4177 Rowland Ave., #B, El Monte, CA 91731
Tel.: (800) 897-5999, (626) 291-5599 Fax: (626)286-0133
E-mail: sales@gsw-usa.com

GSW USA, INC. Copy Right Reserved 2013